RELEASE NUMBER	REV LTR	ZONE	REVISION DESCRIPTION	BY	DATE	APPD
P30080-10	-	-	INITIAL RELEASE	RJP	10/10/07	KGN
P36126-01	A	B4	ADDED SECTION FOR BONDED W/S	GRH	08/22/08	SJW
P36126-02	B	-	REV DESCRIPTION IN TITLE BLOCK	GRH	09/10/08	SJW

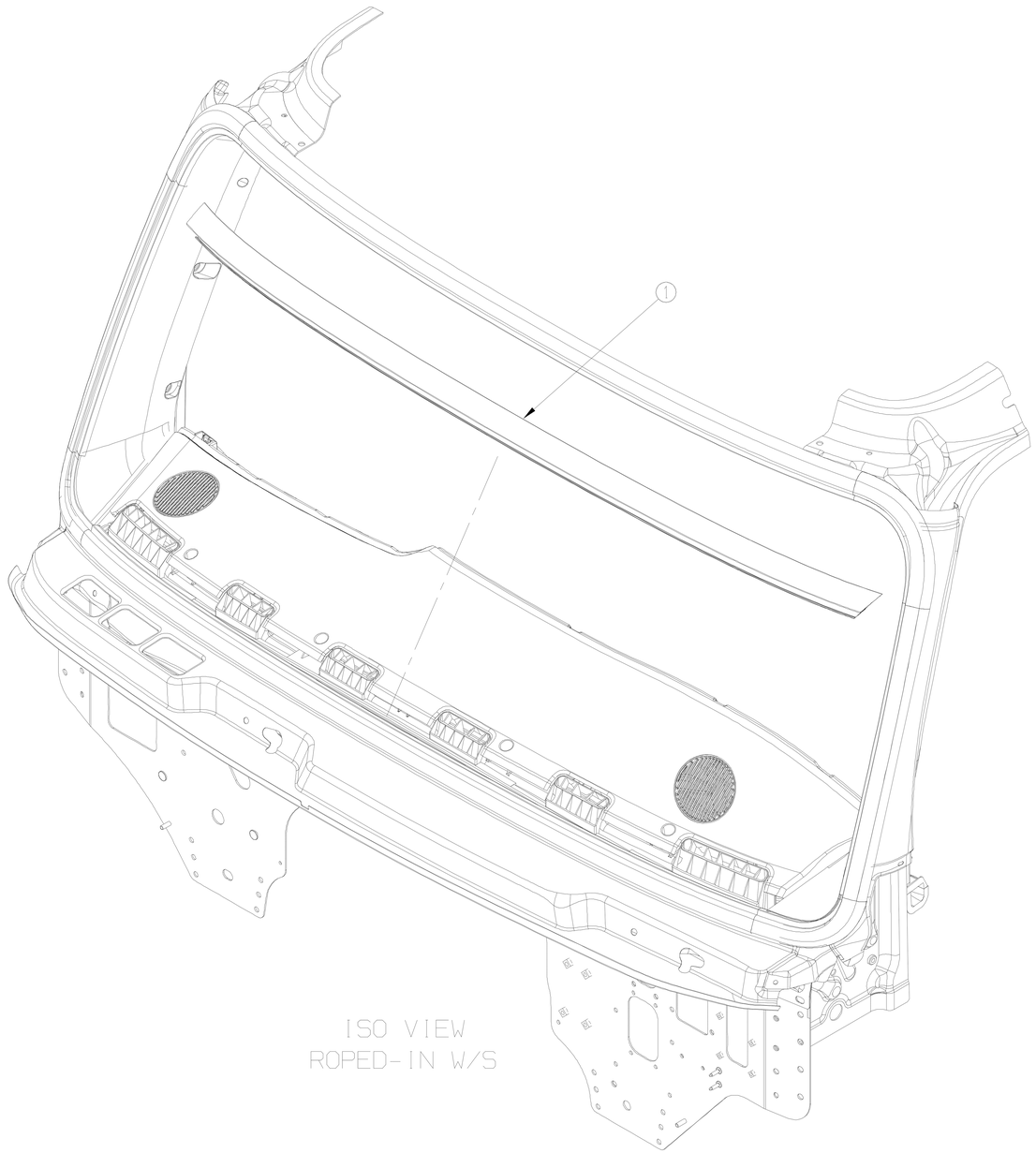

ISO VIEW
ROPED-IN W/S

SECTION Y=0
BONDED W/S

A

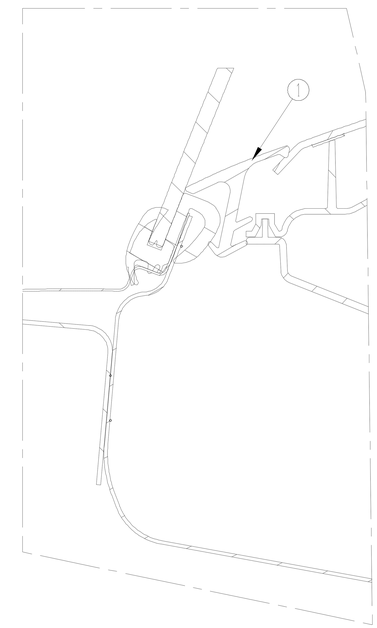

SECTION Y=0
ROPED-IN W/S

1. INSERT ITEM 1 FROM TOP AFTER WINDSHIELD HAS BEEN INSTALLED.

ITEM NUMBER: D22-65140-000

DESCRIPTION: INSTL-SEAL, WINDSHIELD TO DASH

DAIMLER — Daimler Trucks North America

THE INFORMATION CONTAINED HEREIN IS CONFIDENTIAL AND PROPRIETARY TO DAIMLER TRUCKS NORTH AMERICA LLC (DTNA) AND SHALL NOT BE COPIED, REPRODUCED, DISCLOSED, PUBLISHED, OR USED FOR ANY PURPOSE WITHOUT THE EXPRESS WRITTEN PERMISSION OF DTNA

MATERIAL APPROVAL 08/22/08	DATE S. WAZNY	UNLESS OTHERWISE NOTED, DIMENSIONS AND TOLERANCES ARE DEFINED ACCORDING TO ASME STANDARD Y14.5M-1994, WITH EXCEPTIONS PER DTNA 09ENG-W1037.
DRAWN BY R. POPE	DATE 10/10/07	
CHECKED BY K. NEALE	DATE 10/10/07	THIRD ANGLE PROJECTION — UNITS OF MEASURE MM
RESPONSIBLE ENGINEER D. COOK	DATE 10/10/07	
APPROVED BY R. HARRIS	DATE 10/10/07	MFG ENGR/PURCH AGENT 08/22/08 — DATE B. JONSSON

DESCRIPTION: INSTL-SEAL, WINDSHIELD TO DASH

SUPPLEMENTARY DESCRIPTION: 663A1 M2 DASH CLOSE-OUT SEAL

ITEM/DRAWING NUMBER	REV LETTER	SHEET NUMBER
D22-65140	B	1 OF 1

CATIA V5 — D-SIZE