RELEASE NUMBER	REV LTR	ZONE	REVISION DESCRIPTION	BY	DATE	APPD
P24611-27	A	-	INITIAL PRODUCTION RELEASE	AJP	09/15/06	CPJ

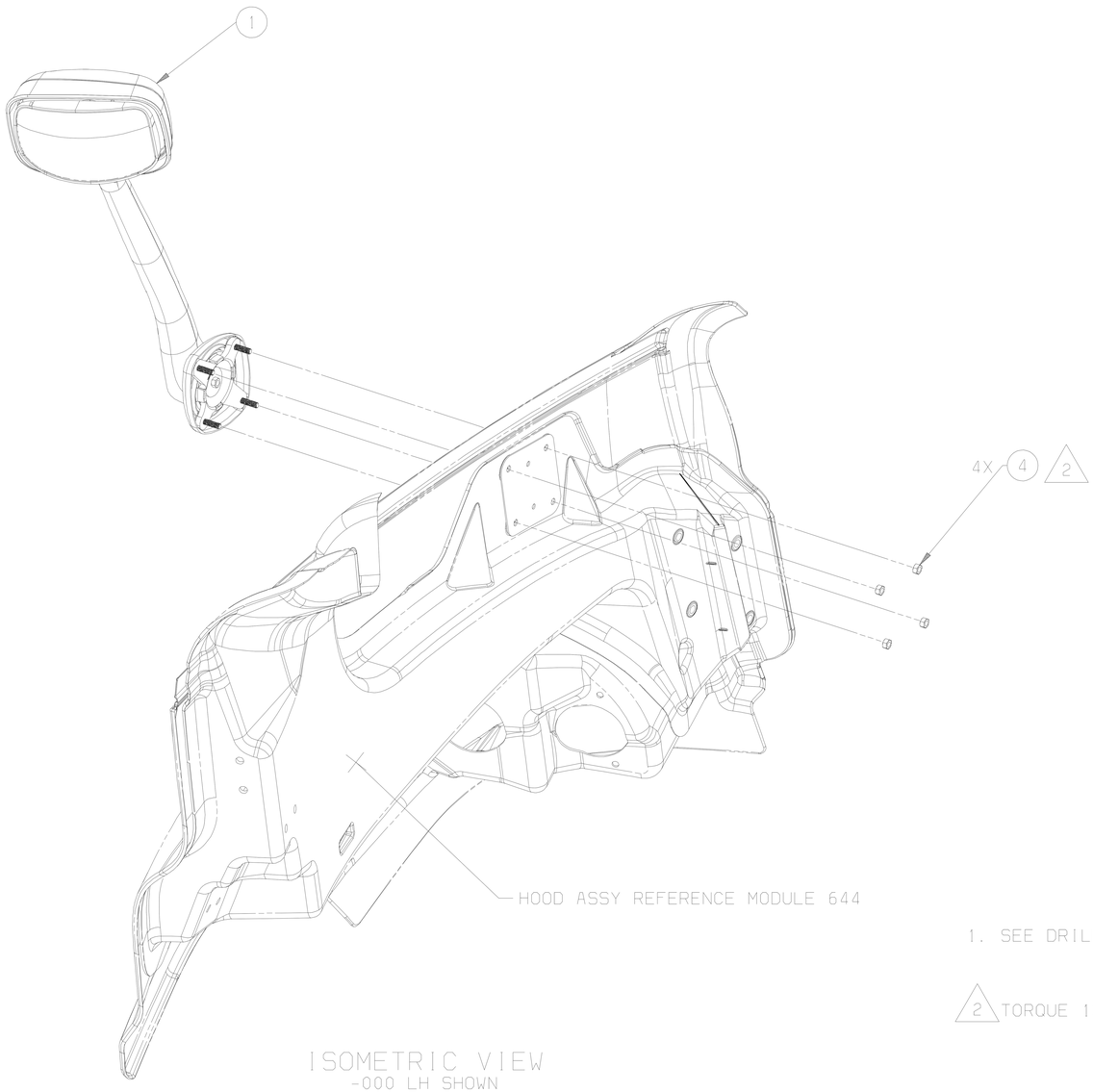

ISOMETRIC VIEW
-000 LH SHOWN
-001 RH OPPOSITE
HOOD TOP OMITTED FOR CLARITY

1. SEE DRILL DIAGRAM (IN BOM) FOR HOLE LOCATIONS

2 TORQUE 10.5+/-1.5 FT-LBS (14.5+/-1.5 N-M) MAXIMUM.

DELIVERY MUST CONFORM EXACTLY WITH DRAWING SPECIFICATIONS AND, WHERE REQUIRED BY Q.A., WITH APPROVED Q.A. SAMPLES. ABSOLUTELY NO CHANGES ARE PERMITTED WITHOUT PRIOR APPROVAL BY FREIGHTLINER LLC. THIS INCLUDES CHANGES TO: SOFTWARE, MATERIALS, INTERNAL COMPONENTS, MANUFACTURING PROCESSES.

ITEM NUMBER	DESCRIPTION	ITEM NUMBER	DESCRIPTION
D22-60716-001	INSTL MIR, FENDER MTD, 125, P3, RH	D22-60716-000	INSTL MIR, FENDER MTD, 125, P3, LH

FREIGHTLINER® LLC

THE INFORMATION CONTAINED HEREIN IS PROPRIETARY DATA, AND IS NOT FOR DISSEMINATION OR DISCLOSURE, IN WHOLE OR IN PART, FOR ANY PURPOSE OTHER THAN THAT FOR WHICH IT IS SUBMITTED, EXCEPT AS AUTHORIZED IN WRITING BY FREIGHTLINER LLC.

MATERIAL APPROVAL: N/A	DATE: -	UNLESS OTHERWISE NOTED, DIMENSIONS AND TOLERANCES ARE DEFINED ACCORDING TO ASME STANDARD Y14.5M-1994, WITH EXCEPTIONS PER FREIGHTLINER EOSM 09E0-K17.
DRAWN BY: A. PONTON	DATE: 11/04/05	
CHECKED BY: M. CENAR	DATE: 11/04/05	THIRD ANGLE PROJECTION — UNITS OF MEASURE: MM
RESPONSIBLE ENGINEER: C. JONG	DATE: 11/04/05	
APPROVED BY: D. WELLS	DATE: 11/04/05	MFG ENGR/PURCH AGENT: G. KNIPS — DATE: 08/25/06

DESCRIPTION: INSTL MIR, FENDER MTD, 125, P3

SUPPLEMENTARY DESCRIPTION: 74BA1, P3 HOOD

ITEM/DRAWING NUMBER	REVISION LETTER	SHEET NUMBER
D22-60716	A	1 OF 2

LAST FILE= 06/09/22 14:49 SHEET FILE= SMA SHEET DRAW ID= D22-60716 IA. INSTL_MIR.FENDER_MTD.125_P3 .01
PLOT DATE= SEPTEMBER 22 2006PLOT TIME= 14:49 USER ID= CATIA DWG FILE LOC = SMARAGD

DO NOT SCALE COPIES OF THIS DRAWING

D-SIZE

RELEASE NUMBER	REV LTR	ZONE	REVISION DESCRIPTION	BY	DATE	APPD
P24611-27	A	XX	INITIAL PRODUCTION RELEASE	AJP	09/15/06	CPJ

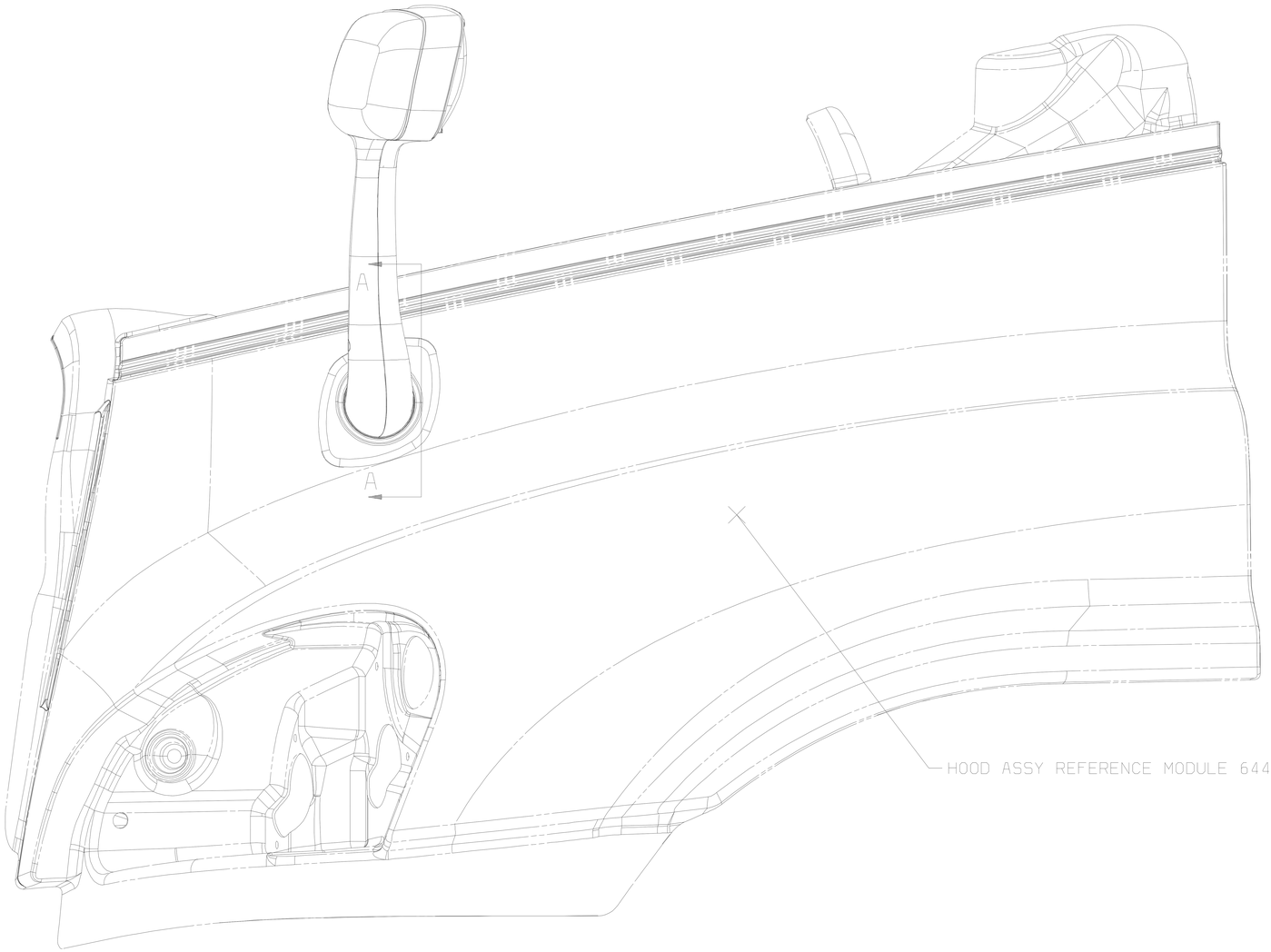

-000 LEFT HAND SHOWN

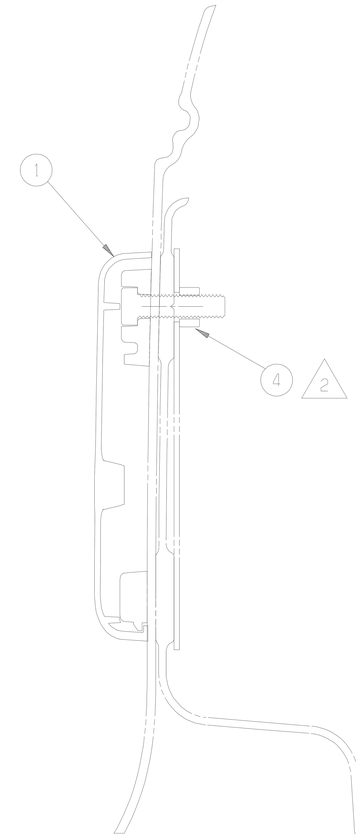

SECTION A-A

FREIGHTLINER® LLC

THE INFORMATION CONTAINED HEREIN IS PROPRIETARY DATA, AND IS NOT FOR DISSEMINATION OR DISCLOSURE, IN WHOLE OR IN PART, FOR ANY PURPOSE OTHER THAN THAT FOR WHICH IT IS SUBMITTED, EXCEPT AS AUTHORIZED IN WRITING BY FREIGHTLINER LLC.

MATERIAL APPROVAL N/A	DATE .	UNLESS OTHERWISE NOTED, DIMENSIONS AND TOLERANCES ARE DEFINED ACCORDING TO ASME STANDARD Y14.5M-1994, WITH EXCEPTIONS PER FREIGHTLINER EOSM 09E0-K17.
DRAWN BY A. PONTON	DATE 11/04/05	
CHECKED BY M. CENAR	DATE 11/04/05	THIRD ANGLE PROJECTION
RESPONSIBLE ENGINEER C. JONG	DATE 11/04/05	UNITS OF MEASURE MM
APPROVED BY D. WELLS	DATE 11/04/05	MFG ENGR/PURCH AGENT G. KNIPS — DATE 08/25/06

DESCRIPTION
INSTL MIR, FENDER MTD, 125, P3

SUPPLEMENTARY DESCRIPTION
74BA1, P3 HOOD

ITEM/DRAWING NUMBER	REVISION LETTER	SHEET NUMBER
D22-60716	A	2 OF 2

LAST FILE= 06/09/22 14:49 SHEET FILE= SMA SHEET DRAW ID= D22-60716 IA INSTL_MIR.FENDER_MTD.125_P3 .02
PLOT DATE= SEPTEMBER 22, 2006PLOT TIME= 14:50 USER ID= CATIA DWG FILE LOC = SMARAD

DO NOT SCALE COPIES OF THIS DRAWING

D-SIZE