RELEASE NUMBER	REV LTR	ZONE	REVISION DESCRIPTION	BY	DATE	APPD
P24611-18	A	-	A-STATUS RELEASE	AJP	07/10/06	CPJ

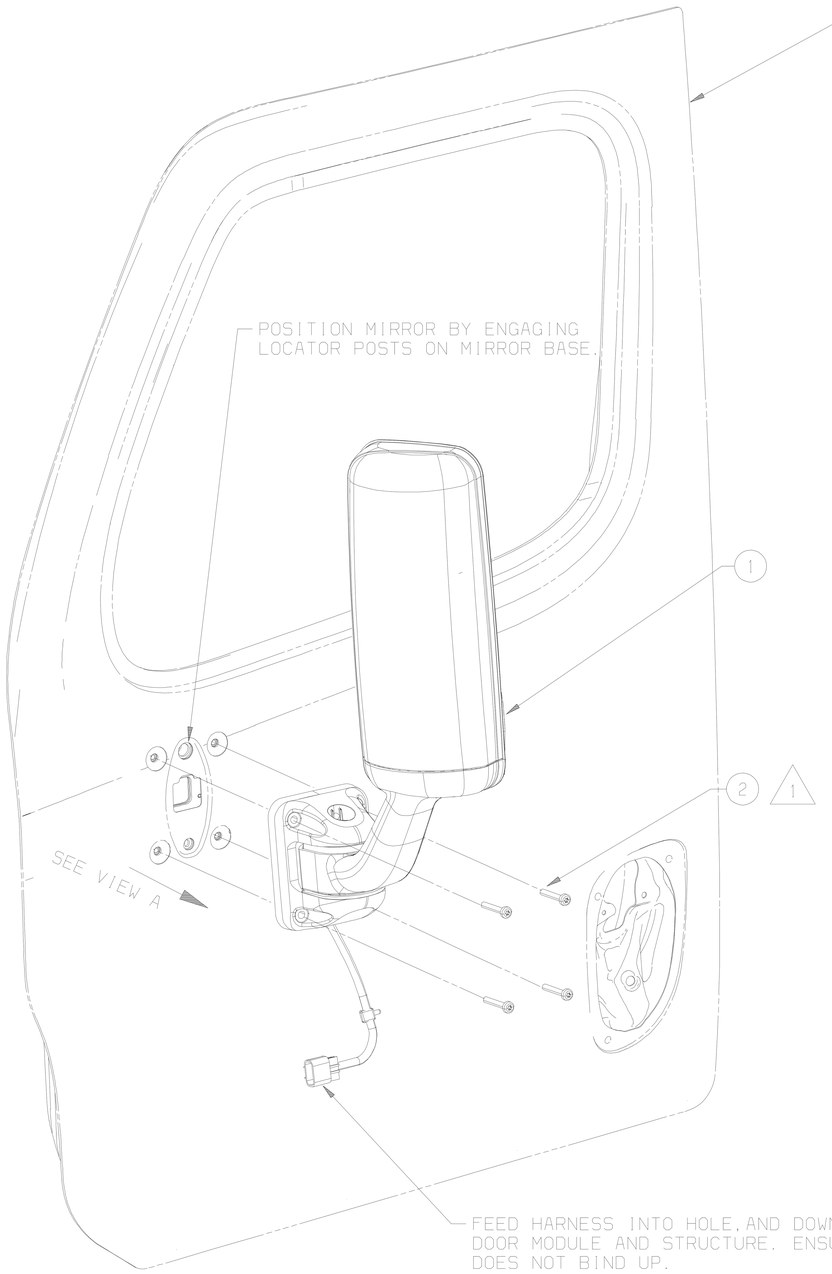

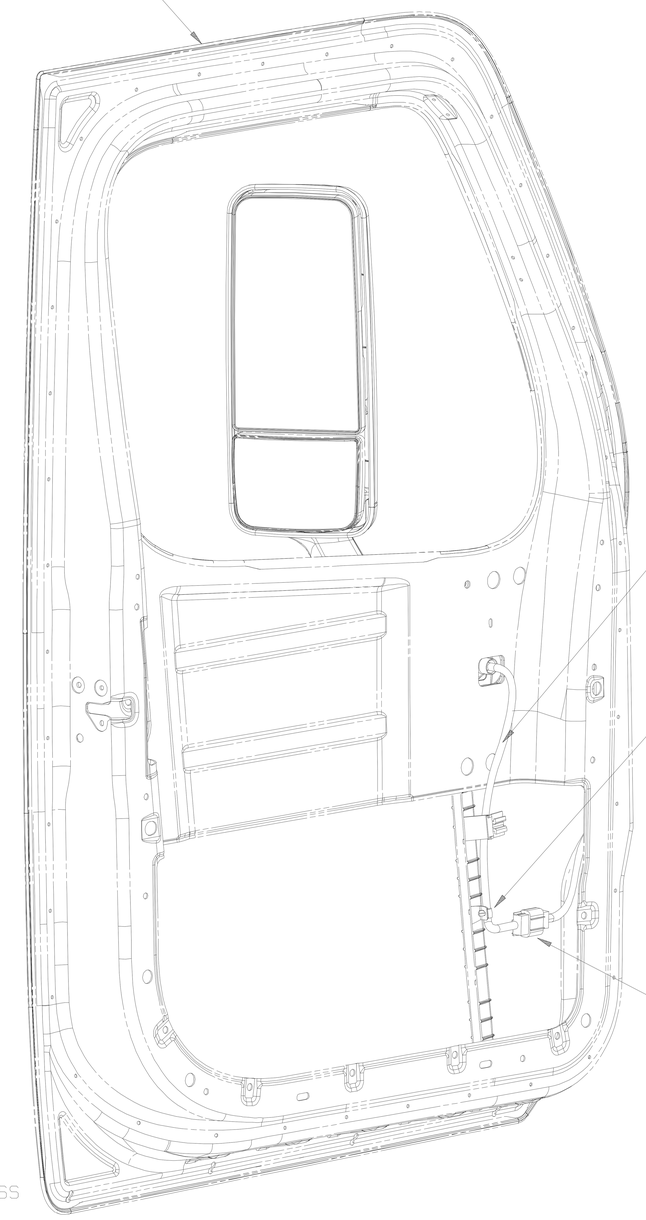

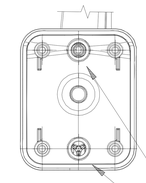

-000, LEFT HAND SHOWN
-001, RIGHT HAND SYMETRICAL

1. TORQUE TO 15 N-M (11 FT-LBS) MAXIMUM.

ITEM NUMBER	DESCRIPTION
D22-60714-001	INSTL-MIRROR, DOOR MTD, P3, RH
D22-60714-000	INSTL-MIRROR, DOOR MTD, P3, LH

FREIGHTLINER® LLC

THE INFORMATION CONTAINED HEREIN IS PROPRIETARY DATA, AND IS NOT FOR DISSEMINATION OR DISCLOSURE, IN WHOLE OR IN PART, FOR ANY PURPOSE OTHER THAN THAT FOR WHICH IT IS SUBMITTED, EXCEPT AS AUTHORIZED IN WRITING BY FREIGHTLINER LLC.

MATERIAL APPROVAL: N/A	DATE: .	UNLESS OTHERWISE NOTED, DIMENSIONS AND TOLERANCES ARE DEFINED ACCORDING TO ASME STANDARD Y14.5M-1994, WITH EXCEPTIONS PER FREIGHTLINER EOSM 09E0-K17.	
DRAWN BY: A. PONTON	DATE: 10/21/05		
CHECKED BY: M. CENAR	DATE: 10/21/05	THIRD ANGLE PROJECTION	UNITS OF MEASURE: MM
RESPONSIBLE ENGINEER: C. JONG	DATE: 10/21/05		
APPROVED BY: D. WELLS	DATE: 10/21/05	MFG ENGR/PURCH AGENT: L. DETRICK/S. FALE	DATE: 10/21/05

DESCRIPTION: INSTL-MIRROR, DOOR MTD, P3

SUPPLEMENTARY DESCRIPTION: 744A1, P3

ITEM/DRAWING NUMBER	REVISION LETTER	SHEET NUMBER
D22-60714	A	1 OF 2

D-SIZE

LAST FILE- 06/07/21 15:54 PLOT DATE- JULY 21, 2006 SHEET FILE- PLOT TIME- 15:54 SMA SHEET USER ID- CATIA DRAW ID- D22-60714 DWG FILE LOC - SMARAGD INSTL-MIRROR.DOOR_MTD.P3 .01

RELEASE NUMBER	REV LTR	ZONE	REVISION DESCRIPTION	BY	DATE	APPD
P24611-18	A	-	A-STATUS RELEASE	AJP	07/10/06	CPJ

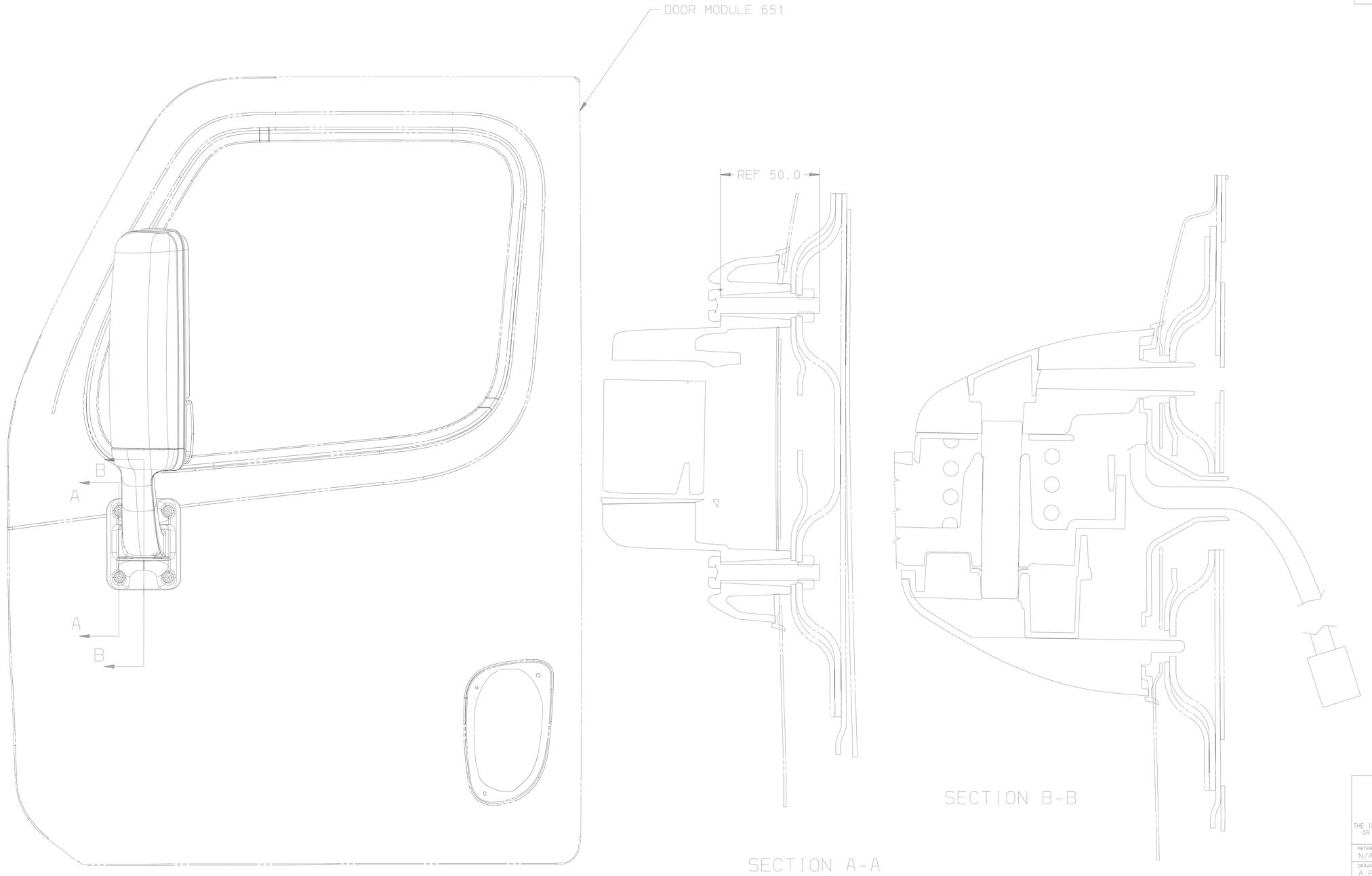

FREIGHTLINER® LLC

THE INFORMATION CONTAINED HEREIN IS PROPRIETARY DATA, AND IS NOT FOR DISSEMINATION OR DISCLOSURE, IN WHOLE OR IN PART, FOR ANY PURPOSE OTHER THAN THAT FOR WHICH IT IS SUBMITTED, EXCEPT AS AUTHORIZED IN WRITING BY FREIGHTLINER LLC.

MATERIAL APPROVAL N/A	DATE .	UNLESS OTHERWISE NOTED, DIMENSIONS AND TOLERANCES ARE DEFINED ACCORDING TO ASME STANDARD Y14.5M-1994, WITH EXCEPTIONS PER FREIGHTLINER EOSM 09E0-K17.
DRAWN BY A.PONTON	DATE 10/21/05	
CHECKED BY M.CENAR	DATE 10/21/05	THIRD ANGLE PROJECTION — UNITS OF MEASURE MM
RESPONSIBLE ENGINEER C.JONG	DATE 10/21/05	
APPROVED BY D.WELLS	DATE 10/21/05	MFG ENGR/PURCH AGENT L.DETRICK/S.FALE — DATE 10/21/05

DESCRIPTION
INSTL-DIAG,DOOR MTD MIR,P3

SUPPLEMENTARY DESCRIPTION
744A1,P3

ITEM/DRAWING NUMBER	REVISION LETTER	SHEET NUMBER
D22-60714	A	2 OF 2

LAST FILE= 06/07/21 15:54 PLOT DATE= JULY 21, 2006 SHEET FILE= PLOT TIME= 15:54 SMA SHEET USER ID= CATIA DRAW ID= D22-60714 DWG FILE LOC = SHARGD INSTL-MIRROR,DOOR_MTD,P3 .02

D-SIZE