RELEASE NUMBER	REV	ZONE	REVISION DESCRIPTION	BY	DATE	ECO
P38441-02	H	ALL	RE-DRAWN IN V5	GDP	10/16/09	RPQ
			SEE SHEET 4			
P39169-01	J	ALL	1. ADDED DELTA 2, 3	GDP	03/03/10	RPQ
		SC	2. ADDED NOTES 2, 3, 4, 5			

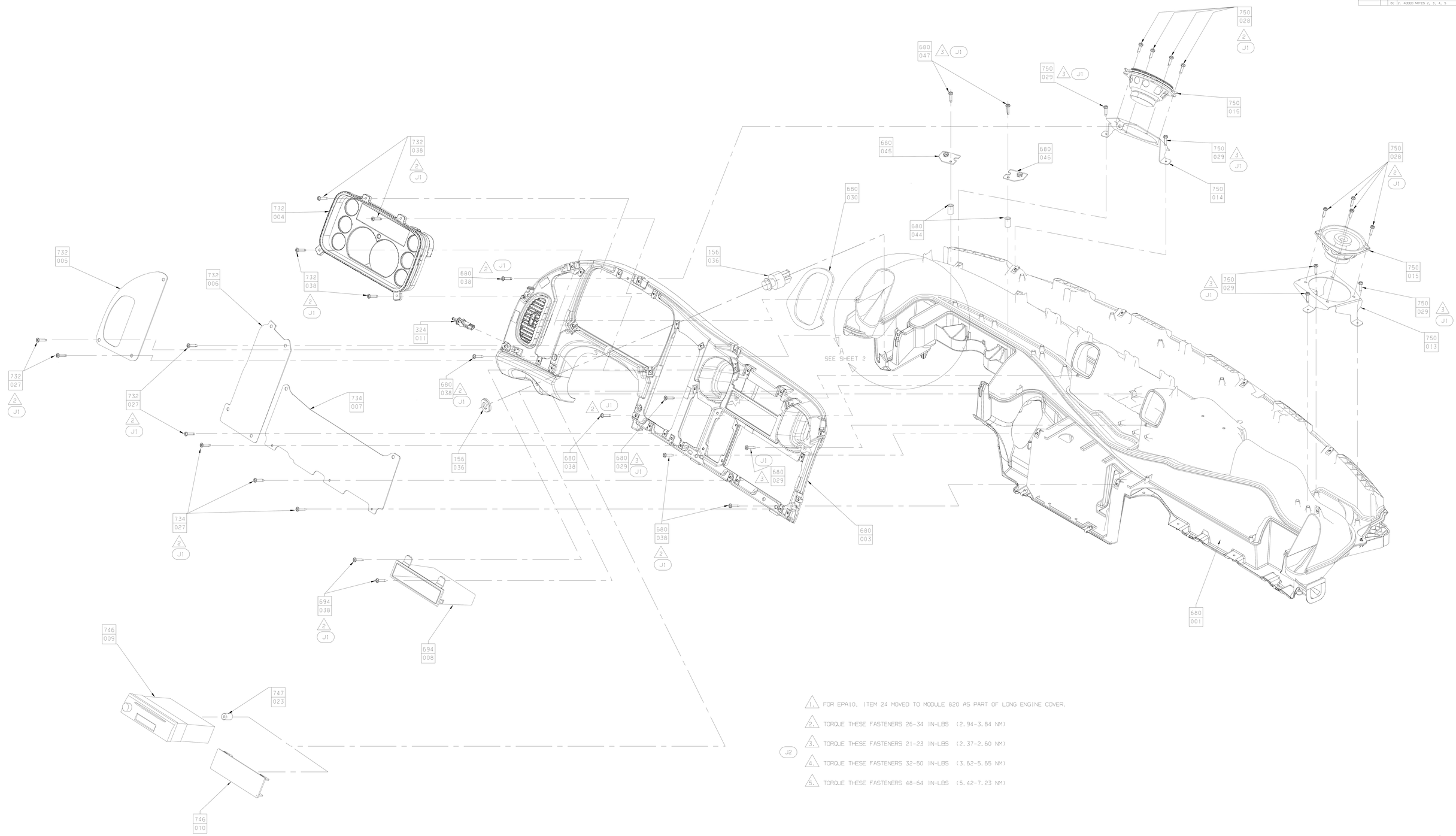

1. FOR EPA10, ITEM 24 MOVED TO MODULE 820 AS PART OF LONG ENGINE COVER.
2. TORQUE THESE FASTENERS 26-34 IN-LBS (2.94-3.84 NM)
3. TORQUE THESE FASTENERS 21-23 IN-LBS (2.37-2.60 NM)
4. TORQUE THESE FASTENERS 32-50 IN-LBS (3.62-5.65 NM)
5. TORQUE THESE FASTENERS 48-64 IN-LBS (5.42-7.23 NM)

J2

DRAWING NUMBER	REVISION	SHEET	FRAME
D22-51689	J	1	2

D22-51689-000
INSTL-DASH, M2 MEDIUM DUTY

DAIMLER

Daimler Trucks North America

THE INFORMATION CONTAINED HEREIN IS CONFIDENTIAL AND PROPRIETARY TO DAIMLER TRUCKS NORTH AMERICA LLC (DTNA) AND SHALL NOT BE COPIED, REPRODUCED, DISCLOSED, PUBLISHED, OR USED FOR ANY PURPOSE WITHOUT THE EXPRESS WRITTEN PERMISSION OF DTNA.

	DATE
MATERIAL APPROVAL N/A	N/A
DRAWN BY G. PHAM	10/14/09
CHECKED BY R. WEBER	10/14/09
RESPONSIBLE ENGINEER C. PHAM	10/14/09
APPROVED BY R. WEBER	10/14/09

UNLESS OTHERWISE NOTED, DIMENSIONS AND TOLERANCES ARE DEFINED ACCORDING TO ASME STANDARD Y14.5M-1994, WITH EXCEPTIONS PER DTNA DBENG-M1037.

THIRD ANGLE PROJECTION

DEVIATION WITH DF MM

DESCRIPTION: INSTL-DASH, MEDIUM DUTY

SUPPLEMENTARY DESCRIPTION: 680A1 FLAT DASH

TOP NUMBER

TOP DRAWING NUMBER	REV LETTER	SHEET NUMBER
D22-51689	J	1 OF 4

CATIA V5 1 42 X 66

RELEASE NUMBER	REV	ZONE	REVISION DESCRIPTION	BY	DATE	APPD
P39441-02	H	ALL	RE-GRAN IN V5	GDP	10/16/09	RPW
P39165-01	J		SEE SHEET 1, 3, 4	GDP	03/03/10	RPW

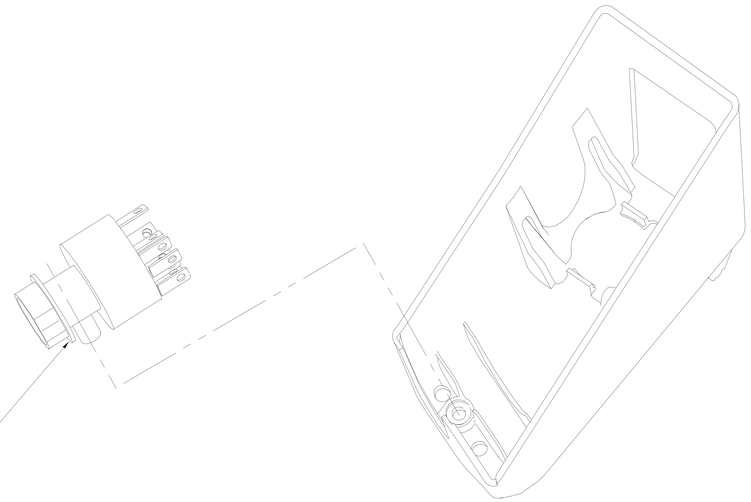

VIEW IN CIRCLE A
(REF PAGE 1)

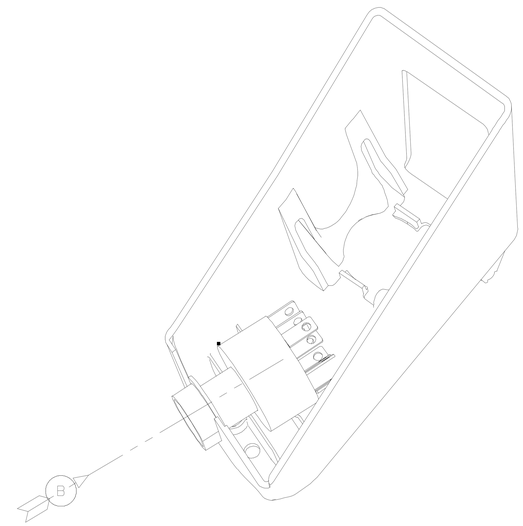

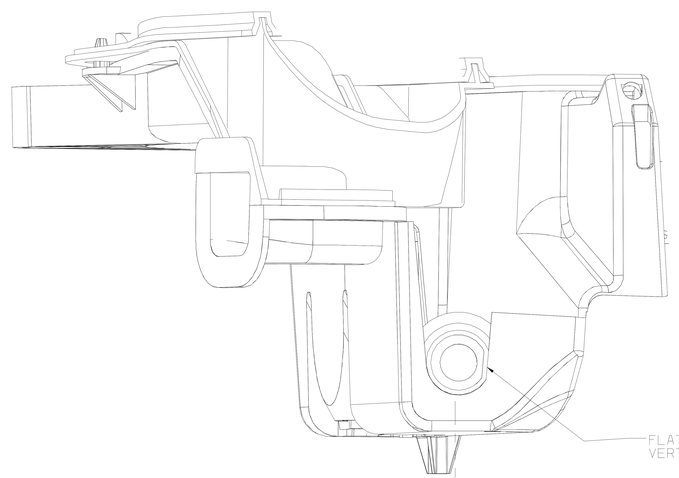

FLAT AREA ON SWITCH MUST BE ALIGHNED
VERTICALLY WITH THE CORRESPONDING AREA ON THE TRAY

VIEW B

156
044

DAIMLER

Daimler Trucks
North America

THE INFORMATION CONTAINED HEREIN IS CONFIDENTIAL AND PROPRIETARY TO DAIMLER TRUCKS NORTH AMERICA LLC (DTNA) AND SHALL NOT BE COPIED, REPRODUCED, DISCLOSED, PUBLISHED, OR USED FOR ANY PURPOSE WITHOUT THE EXPRESS WRITTEN PERMISSION OF DTNA.

MATERIAL SPECIAL		
N/A	N/A	UNLESS OTHERWISE NOTED, DIMENSIONS AND TOLERANCES ARE DEFINED ACCORDING TO ASME STANDARD Y14.5M-1994, WITH EXCEPTIONS PER DTNA DRENG-W1001.
DRAWN BY	DATE	
G.PHAM	10/14/09	
CHECKED BY	DATE	
R. WEBER	10/14/09	
RESPONSIBLE ENGINEER	DATE	THIRD ANGLE PROJECTION
G.PHAM	10/14/09	MEASURE UNITS OF MM
APPROVED BY	DATE	
R. WEBER	10/14/09	

DESCRIPTION
INSTL-DASH, MEDIUM DUTY
SUPPLEMENTARY DESCRIPTION
680A1 FLAT DASH

ITEM/DRAWING NUMBER	REV LETTER	SHEET NUMBER
D22-51689	J	2 of 4

CATIA V5 1 42 X 66

DRAWING NUMBER	REVISION	SHEET	FRAME
D22-51689	J	2	2

RELEASE NUMBER	REV	ZONE	REVISION DESCRIPTION	BY	DATE	APPD
P39441-02	H	ALL	RE-GRAN; IN V5	GDP	10/16/09	RPW
P39165-01	J	ALL	ADDED DELTA 2	GDP	03/03/10	RPW

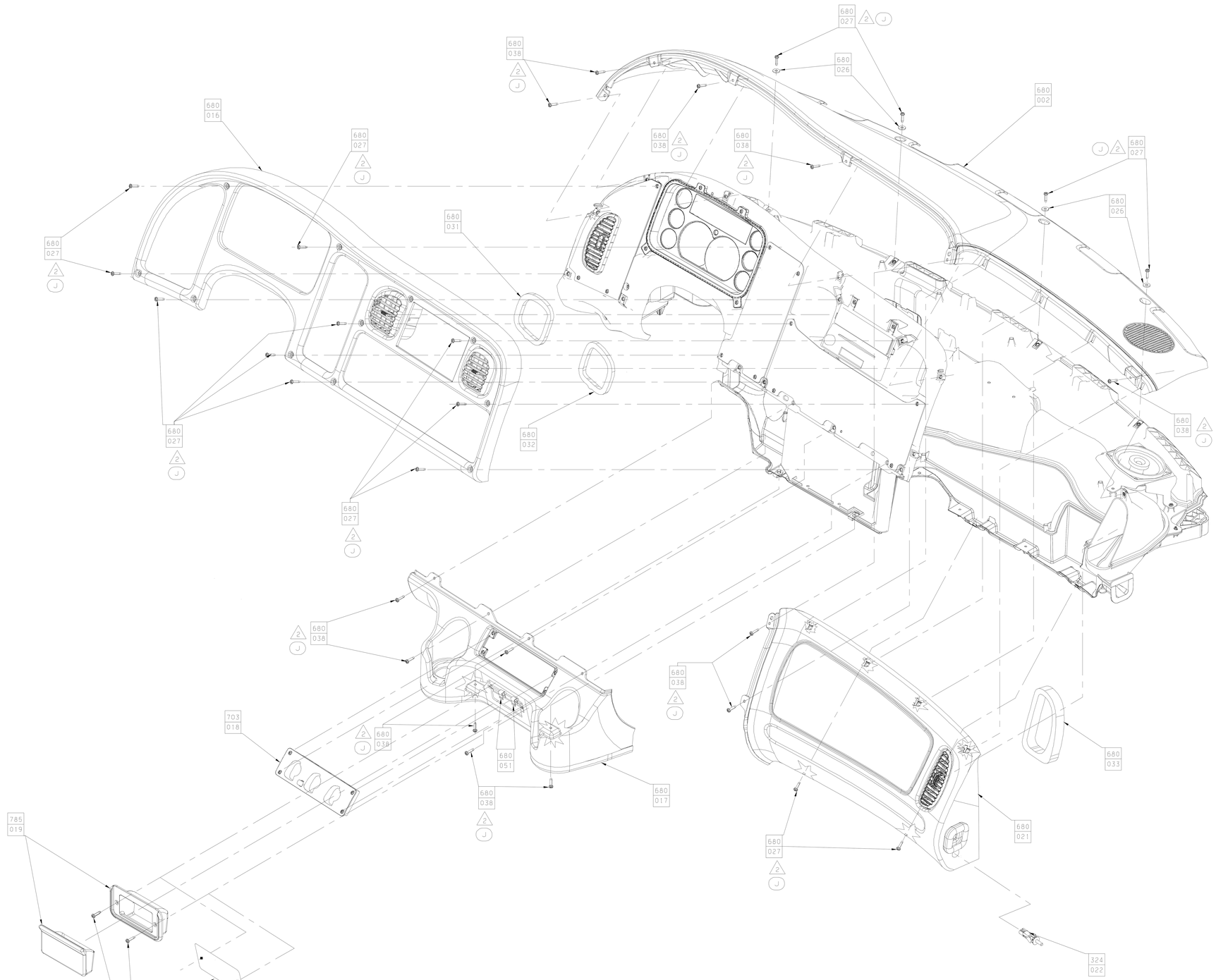

NOTE: ALIGN ASHTRAY AND COVER TO DASH.

DRAWING NUMBER	REVISION	SHEET	FRAME
D22-51689	J	3	2

DAIMLER

Daimler Trucks North America

THE INFORMATION CONTAINED HEREIN IS CONFIDENTIAL AND PROPRIETARY TO DAIMLER TRUCKS NORTH AMERICA LLC (DTNA) AND SHALL NOT BE COPIED, REPRODUCED, DISCLOSED, PUBLISHED, OR USED FOR ANY PURPOSE WITHOUT THE EXPRESS WRITTEN PERMISSION OF DTNA.

MATERIAL/PROCESS: N/A	DATE: N/A	UNLESS OTHERWISE NOTED, DIMENSIONS ARE TO STANDARD ATA DRAWING PRACTICE TO ASME STANDARD Y14.5M-1994, WITH EXCEPTIONS PER DTNA DRENG-W1037.
DRAWN BY: G.PHAM	DATE: 10/14/09	
CHECKED BY: R.WEBER	DATE: 10/14/09	
RESPONSIBLE ENGINEER: G.PHAM	DATE: 10/14/09	THIRD ANGLE PROJECTION
APPROVED BY: R.WEBER	DATE: 10/14/09	DIMENSIONS ARE IN MM

DESCRIPTION: INSTL-DASH, MEDIUM DUTY

SUPPLEMENTARY DESCRIPTION: 680A1 FLAT DASH

TECH DRAWING NUMBER	REV LETTER	SHEET NUMBER
D22-51689	J	3 or 4

CATIA V5 1 42 X 66

RELEASE NUMBER	REV LTR	ZONE	REVISION DESCRIPTION	BY	DATE	APPD
P38441-02	H	ALL	RE-ORPAN IN V5	GDP	10/16/09	RPQ
		C9	ADDED PRE-EPA10 ONLY & DELTA 1			
P39169-01	J	ALL	ADDED DELTA 2, 4, 5	GDP	03/03/10	RPQ

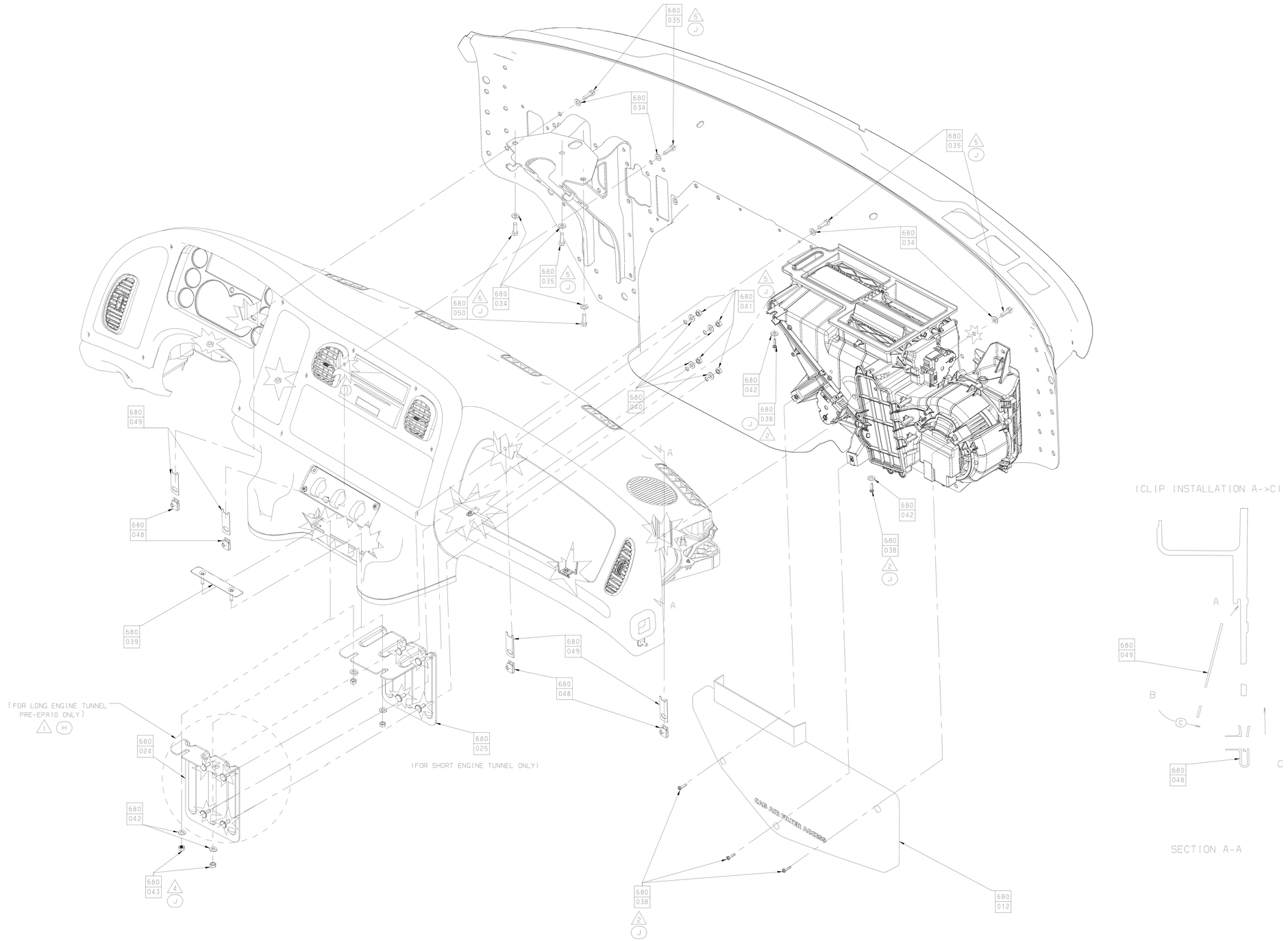

DRAWING NUMBER	REVISION	SHEET	FRAME
D22-51689	J	4	2

DAIMLER — Daimler Trucks North America

THE INFORMATION CONTAINED HEREIN IS CONFIDENTIAL AND PROPRIETARY TO DAIMLER TRUCKS NORTH AMERICA LLC (DTNA) AND SHALL NOT BE COPIED, REPRODUCED, DISCLOSED, PUBLISHED, OR USED FOR ANY PURPOSE WITHOUT THE EXPRESS WRITTEN PERMISSION OF DTNA.

MATERIAL/PROCESS	DATE	UNLESS OTHERWISE NOTED, DIMENSIONS ARE INCLUSIVE OF FINISH AND TOLERANCING TO ASME STANDARD Y14.5M-1994, WITH EXCEPTIONS PER DTNA DRENG-W1037.
N/A	N/A	
DRAWN BY	DATE	
G.PHAM	10/14/09	
CHECKED BY	DATE	
R.WEBER	10/14/09	
RESPONSIBLE ENGINEER	DATE	THIRD ANGLE PROJECTION
G.PHAM	10/14/09	
APPROVED BY	DATE	
R.WEBER	10/14/09	

DIMENSIONS ARE IN MM

DESCRIPTION: INSTL-DASH, MEDIUM DUTY

SUPPLEMENTARY DESCRIPTION: 680A1 FLAT DASH

TOP DRAWING NUMBER	REV LETTER	SHEET NUMBER
D22-51689	J	4 or 4

CATIA V5 1 — 42 X 66