RELEASE NUMBER	REV LTR	ZONE	REVISION DESCRIPTION	BY	DATE	APPD
P07498-05	-	XX	INITIAL RELEASE	GRD	09/14/99	NNZ

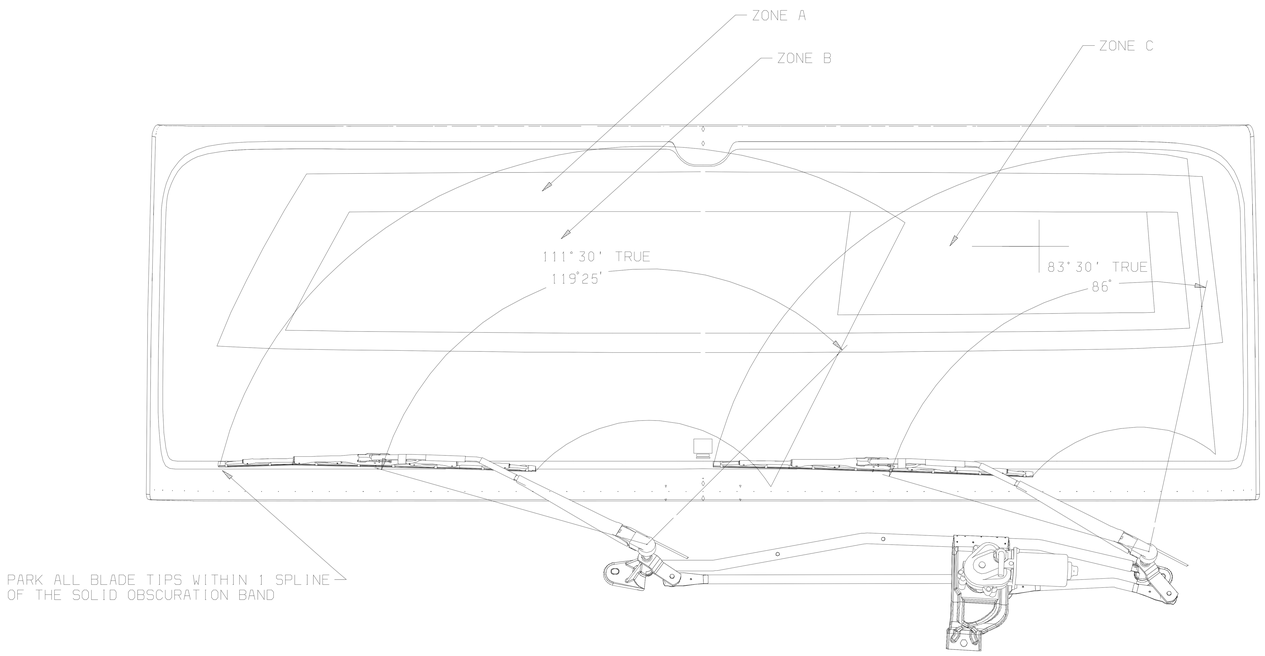

TOTAL DLO AREA = 1838.32 sq.in.
TOTAL WIPED AREA = 1364.39 sq.in.

ZONE	TOTAL AREA	WIPED AREA	%	SAE MIN %
A	915.14 sq.in	738.84 sq.in	85.7%	80%
B	560.22 sq.in	545.06 sq.in	97.3%	94%
C	167.92 sq.in	167.72 sq.in	99.9%	99%

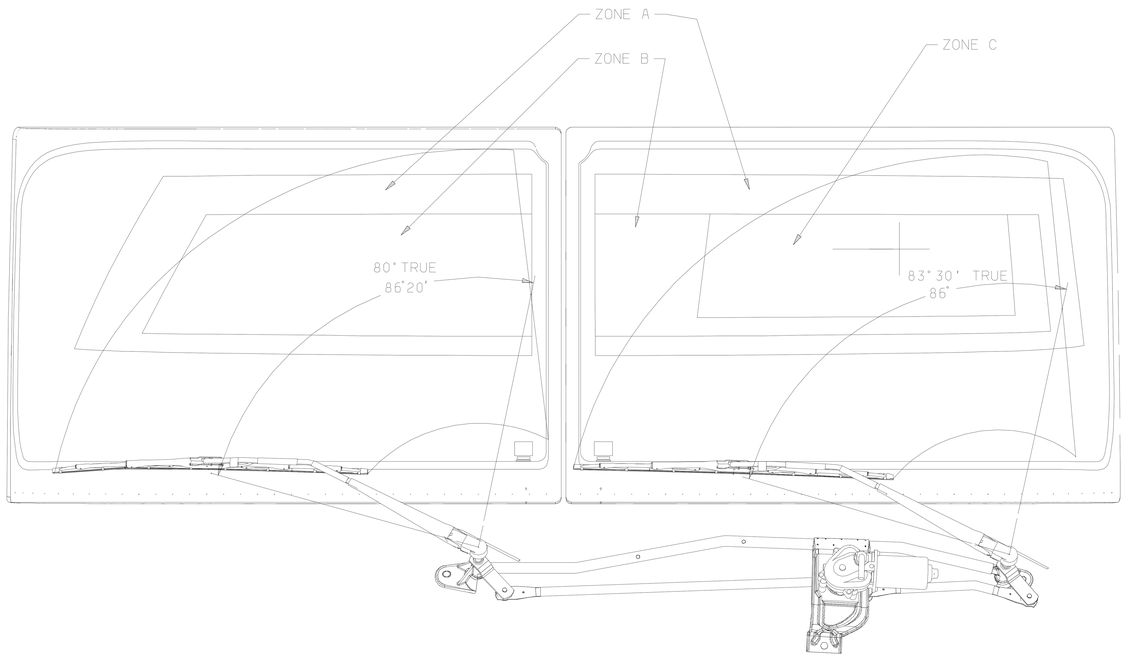

TOTAL DLO AREA = 1784.19 sq.in.
TOTAL WIPED AREA = 1219.36 sq.in.

ZONE	TOTAL AREA	WIPED AREA	%	SAE MIN %
A	854.21 sq.in	669.93 sq.in	78.4%	65%
B	519.22 sq.in	452.57 sq.in	87.2%	70%
C	167.92 sq.in	162.40 sq.in	96.7%	84%

ITEM NUMBER D22-51387-000
DESCRIPTION INST TRICO WIPER SYSTEM

FREIGHTLINER LLC

THE INFORMATION CONTAINED HEREIN IS PROPRIETARY DATA, AND IS NOT FOR DISSEMINATION OR DISCLOSURE, IN WHOLE OR IN PART, FOR ANY PURPOSE OTHER THAN THAT FOR WHICH IT IS SUBMITTED, EXCEPT AS AUTHORIZED IN WRITING BY FREIGHTLINER LLC.

MATERIAL APPROVAL DATE
DRAWN BY R.DREW DATE 09/14/99
CHECKED BY W.MASSEY DATE 10/05/99
RESPONSIBLE ENGINEER N.ZAMANI DATE 09/14/99
APPROVED BY N.ZAMANI DATE 09/14/99

UNLESS OTHERWISE NOTED, DIMENSIONS AND TOLERANCES ARE DEFINED ACCORDING TO ANSI STANDARD Y14.5M-1982, WITH EXCEPTIONS PER FREIGHTLINER EGM SECT 307.

THIRD ANGLE PROJECTION
UNITS OF MEASURE MM
MFG ENGR/PURCH AGENT LYNELLE DETRICK DATE 09/20/99

DESCRIPTION INST TRICO WIPER SYSTEM
SUPPLEMENTARY DESCRIPTION COLUMBIA AND ST

ITEM/DRAWING NUMBER D22-51387 | REVISION LETTER – | SHEET NUMBER 1 OF 2

LAST FILE= 00/12/1 12:00 SHEET FILE= BSIZ.SHEET DRAW ID= D22-51387 - - INST TRICO WIPER SYSTEM FPL865
PLOT DATE= DECEMBER 11, 2000 PLOT TIME= 12:01 USER ID= CATIA

DO NOT SCALE COPIES OF THIS DRAWING

RELEASE NUMBER	REV LTR	ZONE	REVISION DESCRIPTION	BY	DATE	APPD
P07498-05	-	XX	INITIAL RELEASE	GRD	09/14/99	NNZ

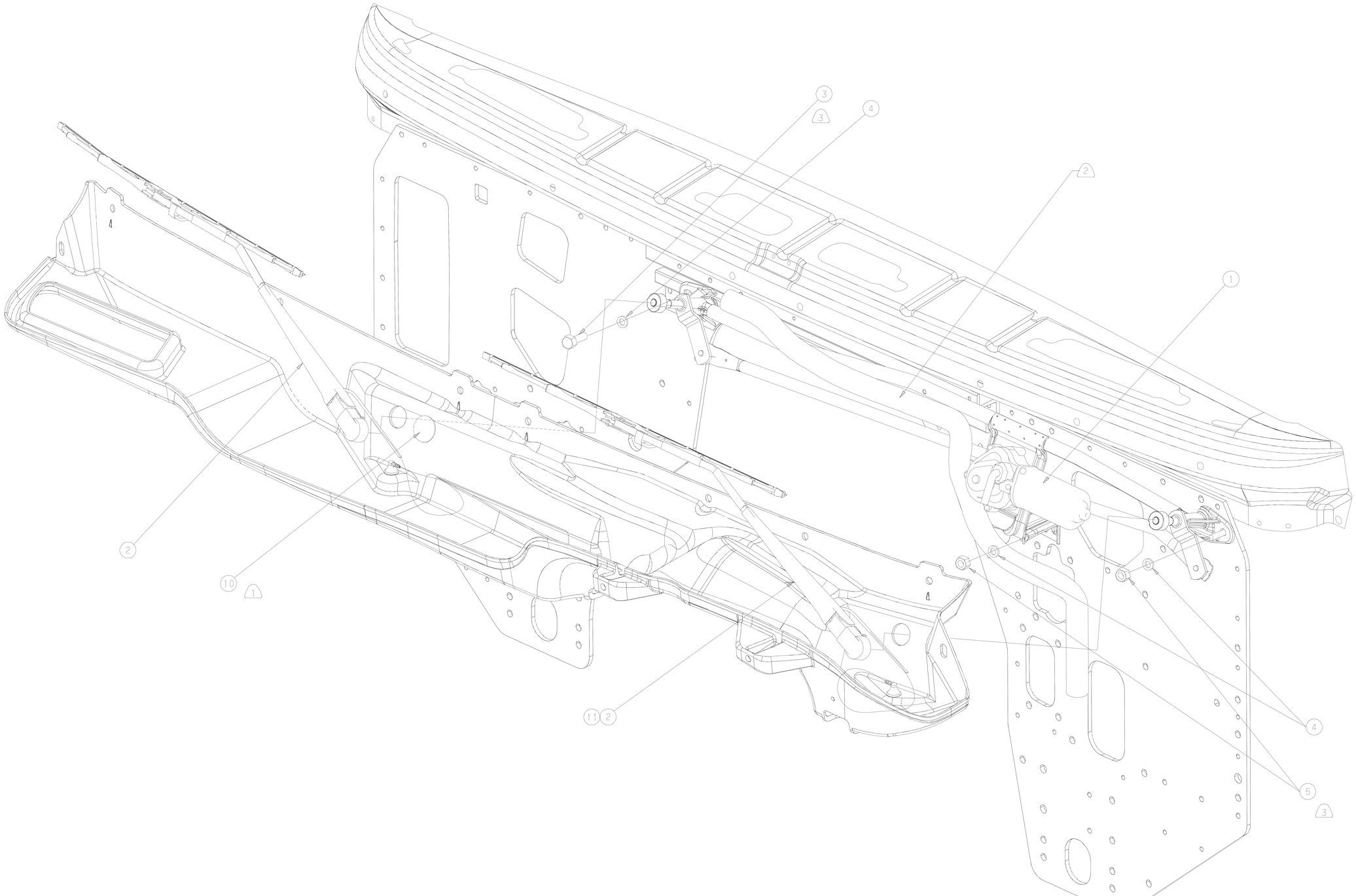

1. PLUG SHOWN IN THE TWO PIECE GLASS POSITION.
2. INSPECT WIRE HARNESS INSTALLATION TO ASSURE CLEARANCE TO WIPER MECHANISM.
3. TORQUE FASTENER TO 10-16ft.lbs.

FREIGHTLINER LLC

THE INFORMATION CONTAINED HEREIN IS PROPRIETARY DATA, AND IS NOT FOR DISSEMINATION OR DISCLOSURE, IN WHOLE OR IN PART, FOR ANY PURPOSE OTHER THAN THAT FOR WHICH IT IS SUBMITTED, EXCEPT AS AUTHORIZED IN WRITING BY FREIGHTLINER LLC.

MATERIAL APPROVAL	DATE	UNLESS OTHERWISE NOTED, DIMENSIONS AND TOLERANCES ARE DEFINED ACCORDING TO ANSI STANDARD Y14.5M-1982, WITH EXCEPTIONS PER FREIGHTLINER EGM SECT 307.	
DRAWN BY R.DREW	DATE 09/14/99		
CHECKED BY W.MASSEY	DATE 10/05/99	THIRD ANGLE PROJECTION	UNITS OF MEASURE MM
RESPONSIBLE ENGINEER N.ZAMANI	DATE 09/14/99		
APPROVED BY N.ZAMANI	DATE 09/14/99	MFG ENGR/PURCH AGENT LYNELLE DETRICK	DATE 09/20/99

DESCRIPTION: INST TRICO WIPER SYSTEM

SUPPLEMENTARY DESCRIPTION: COLUMBIA AND ST

ITEM/DRAWING NUMBER	REVISION LETTER	SHEET NUMBER
D22-51387	—	2 OF 2

DO NOT SCALE COPIES OF THIS DRAWING

LAST FILE= 00/12/11 12:00 SHEET FILE= BS12.SHEET FPL065
PLOT DATE= DECEMBER 11, 2000 PLOT TIME= 12:01 USER ID= CATIA DRAW ID= D22-51387 . 2 - . .INST TRICO WIPER SYSTEM