RELEASE NUMBER	REV	ZONE	REVISION DESCRIPTION	BY	DATE	APRV
PD0724-17	-	-	INITIAL RELEASE	LEK	12/18/99	KKK

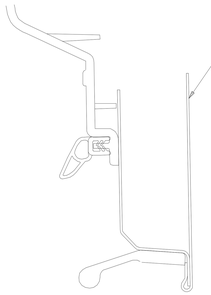

SECT A-A

SECT B-B

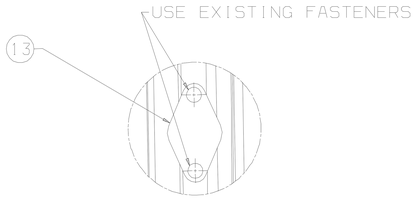

VIEW X

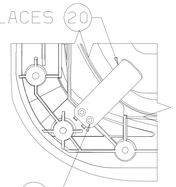

VIEW Y

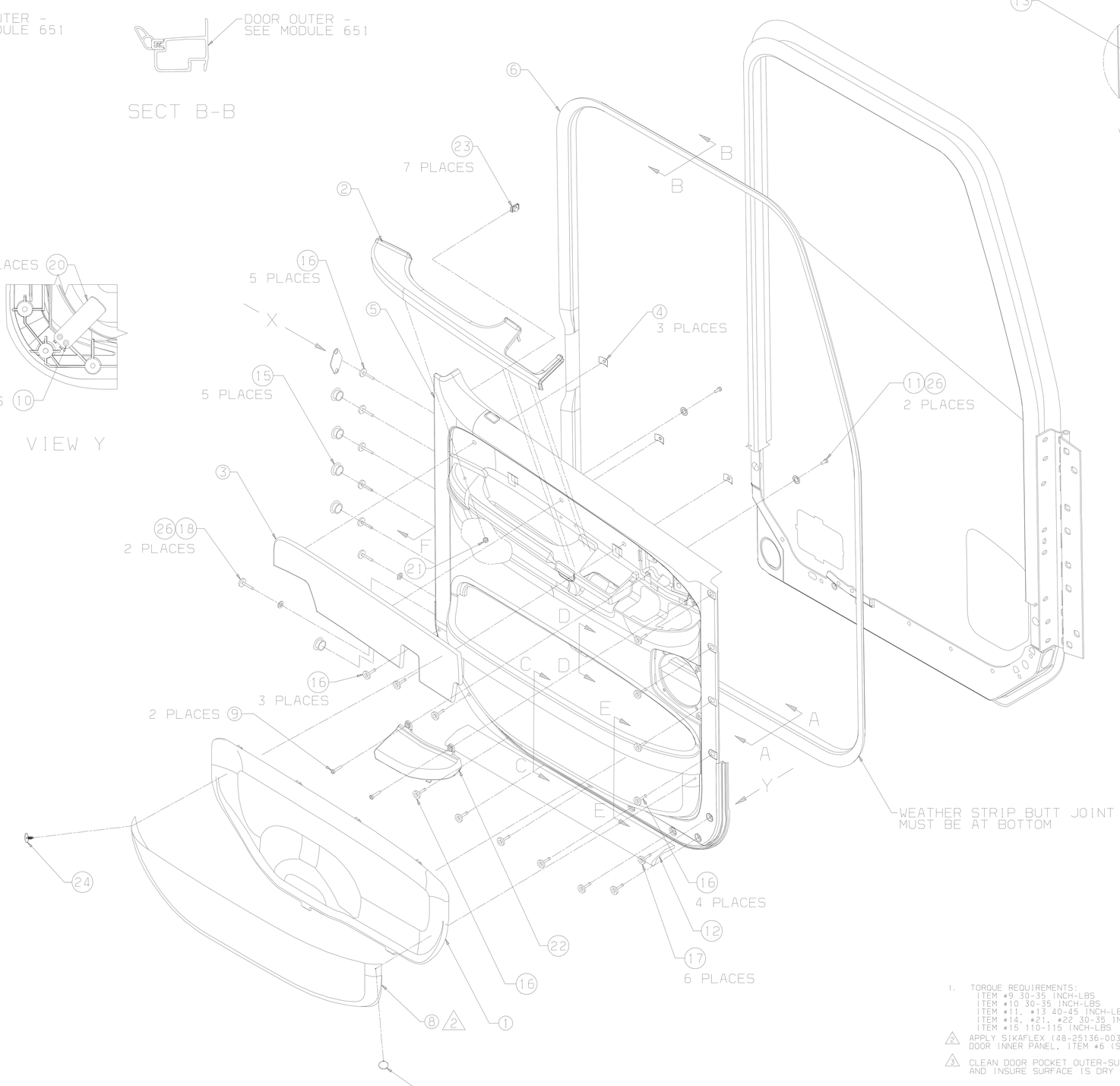

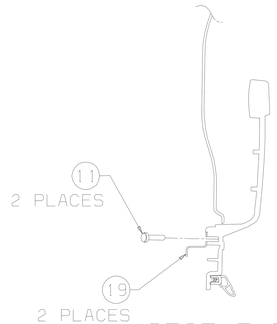

SECT E-E

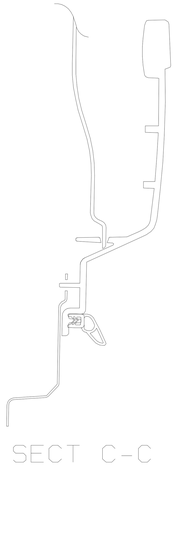

SECT C-C

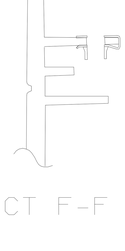

SECT F-F

SECT D-D

1. TORQUE REQUIREMENTS:
   ITEM #9 30-35 INCH-LBS
   ITEM #10 30-35 INCH-LBS
   ITEM #11, #13 40-45 INCH-LBS
   ITEM #14, #21, #22 30-35 INCH-LBS
   ITEM #15 110-115 INCH-LBS

2. APPLY SIKAFLEX (48-25136-003) TO ITEM #8 BEFORE ATTACHING TO DOOR INNER PANEL. ITEM #6 (SEE SHEET 2 FOR GLUE LOCATION.)

3. CLEAN DOOR POCKET OUTER-SURFACE WITH 50:50 ALCOHOL/WATER AND INSURE SURFACE IS DRY BEFORE BONDING ITEM #8.

DRAWING NUMBER	REVISION	SHEET	FRAME
D18-42575	-	1	2

TOP NUMBER: D18-42575-000

DESCRIPTION: DOOR INSTL-DWG, LH

FREIGHTLINER LLC

THE INFORMATION CONTAINED HEREIN IS PROPRIETARY DATA, AND IS THE PROPERTY OF FREIGHTLINER LLC. IT MAY NOT BE USED FOR ANY PURPOSE OTHER THAN THAT FOR WHICH IT IS SUBMITTED, EXCEPT AS AUTHORIZED IN WRITING BY FREIGHTLINER LLC.

MATERIAL APPROVAL K. KEE	DATE 12/16/99	UNLESS OTHERWISE NOTED, DIMENSIONS AND TOLERANCES ARE DEFINED ACCORDING TO ANSI STANDARD Y14.5M-1982, WITH EXCEPTIONS PER FREIGHTLINER ENG SECT 397.
DRAWN BY L. KIEHL	DATE 12/16/99	
DESIGN BY C.R. COOPER	DATE 01/10/00	THIRD ANGLE PROJECTION — UNITS OF MEASURE MM
MECHANICAL ENGINEER K. KEE	DATE 12/16/99	
APPROVED BY C. COOPER	DATE 12/16/99	REG. ENGINEERING AGENT KEITH CARLSON — DATE 12/17/99

DESCRIPTION: DOOR INSTL-DWG, LH

SUPPLEMENTARY DESCRIPTION: FLH/FLX

ITEM DRAWING NUMBER	REVISION LETTER	SHEET NUMBER
D18-42575	—	1 of 2

DO NOT SCALE COPIES OF THIS DRAWING

LAST FILE: 01/10/00 01:11
PLOT DATE: DECEMBER 9, 2000 PLOT TIME: 01:11 SHEET FILE: D18-42575 PAGE SHEET: 1 USER ID: CATIA DRAW ID: D18-42575 - DOOR INSTL-DWG, LH FR-865

RELEASE NUMBER	REV	ZONE	REVISION DESCRIPTION	BY	DATE	APRV
PD0724-17	-	-	INITIAL RELEASE	LEK	12/18/99	KKK

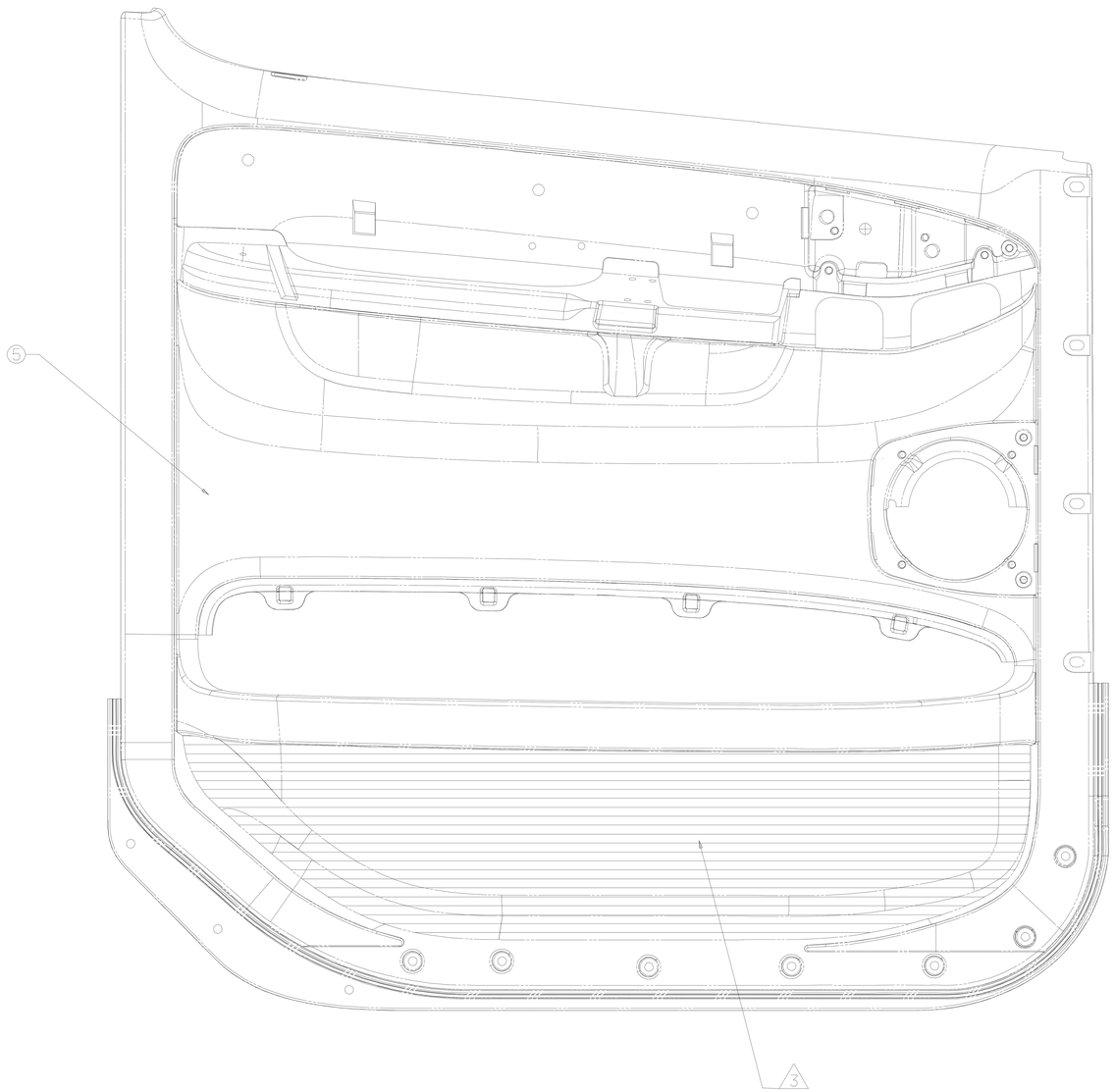

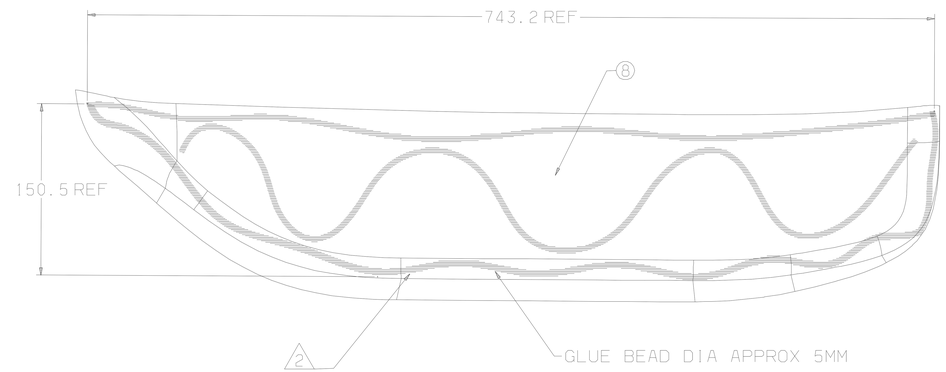

DRAWING NUMBER	REVISION	SHEET	FRAME
D18-42575	-	2	2

DO NOT SCALE COPIES OF THIS DRAWING

FREIGHTLINER LLC

THE INFORMATION CONTAINED HEREIN IS PROPRIETARY DATA AND MUST BE DISSEMINATED OR REPRODUCED IN WHOLE OR IN PART, FOR ANY PURPOSE WHATSOEVER, EXCEPT FOR SUBMITTED, EXCEPT AS AUTHORIZED IN WRITING BY FREIGHTLINER LLC.

MATERIAL APPROVAL K.KEE	12/16/99	UNLESS OTHERWISE NOTED, DIMENSIONS AND TOLERANCES ARE DEFINED ACCORDING TO ANSI STANDARD Y14.5M-1982, WITH EXCEPTIONS PER FREIGHTLINER ECN SECT 321.
DESIGNED BY L.A.TEHL	12/16/99	
CHECKED BY C.R.COOPER	01/10/00	THIRD ANGLE PROJECTION
REGRESSIBLE ENGINEER K.KEE	12/16/99	UNITS OF MEASURE MM
APPROVED BY C.COOPER	12/16/99	RELENGINEERING AGENT KEITH CARLSON 12/17/99

DESCRIPTION

DOOR INSTL-DWG, LH

SUPPLEMENTARY DESCRIPTION

FLH/FLX

ITEM DRAWING NUMBER	REVISION LETTER	SHEET NUMBER
D18-42575	—	2 OF 2

LAST FILE: 01/11/05 01:11
PLOT DATE: DECEMBER 9, 2010 PLOT TIME: 8:11
SHEET FILE: PRT SHEET
LASER ID: DA11A
DRAW ID: D18-42575 2 . DOOR INSTL-DWG, LH FIN.MAS