RELEASE NUMBER	REV LTR	ZONE	REVISION DESCRIPTION	BY	DATE	APPD
P17086-01	-	-	INITIAL RELEASE REPLACES D17-13899	JEM	01/23/02	CLT
P34476-45	A	A4	ADDED NOTE 4	SCG	01/14/08	MEG

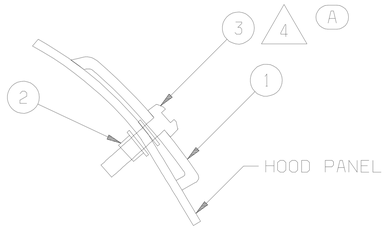

SECTION B-B
INSTALLED POSITION

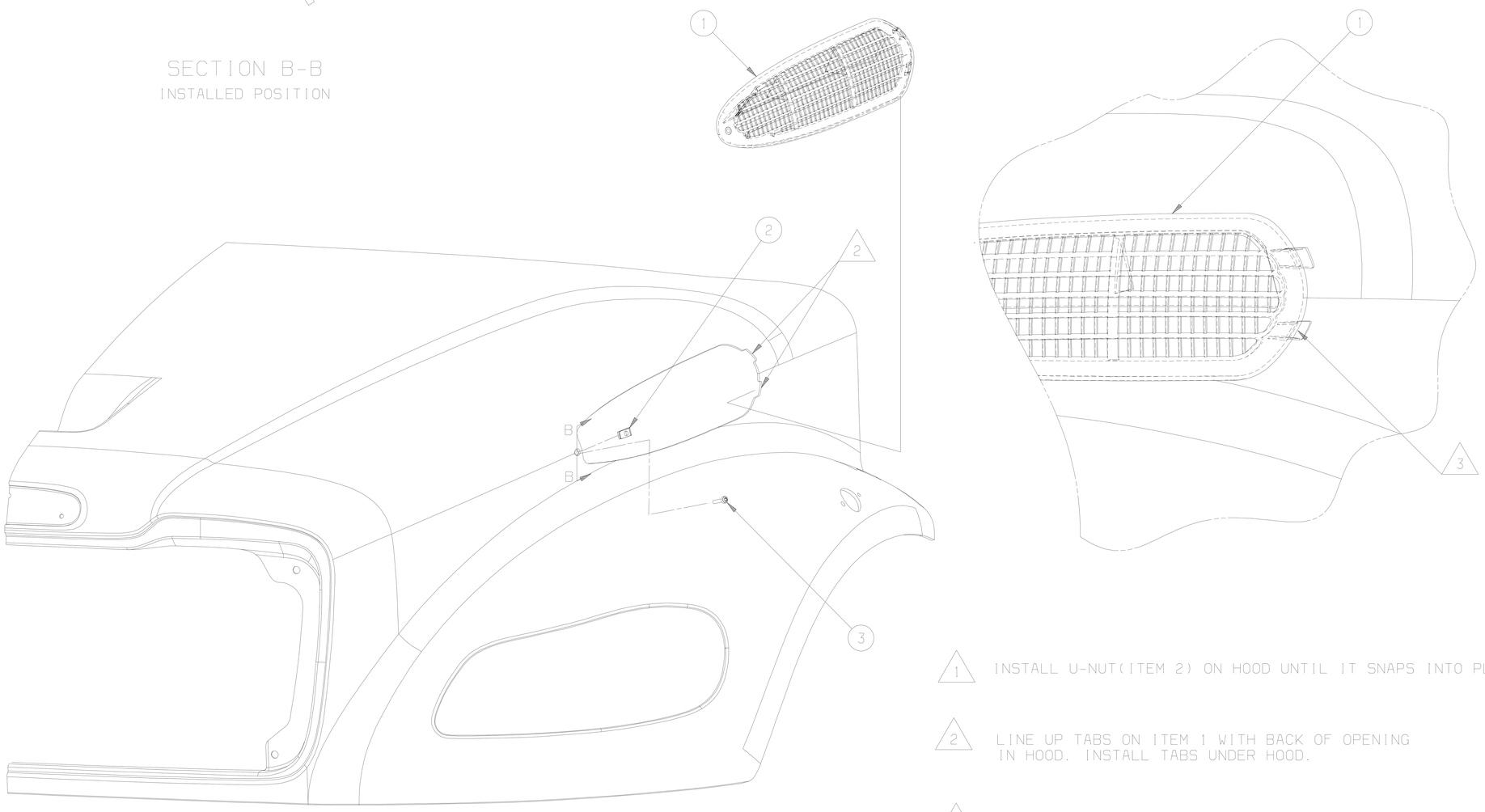

1. INSTALL U-NUT(ITEM 2) ON HOOD UNTIL IT SNAPS INTO PLACE.
2. LINE UP TABS ON ITEM 1 WITH BACK OF OPENING IN HOOD. INSTALL TABS UNDER HOOD.
3. SLIDE ITEM 1 REARWARD AND INSTALL ITEM 3 THRU FORWARD MOUNTING HOLE.
4. (A) TORQUE ITEM 3 TO 20-25 IN-LB

ITEM NUMBER: D17-14820-000
DESCRIPTION: INSTL-GRILLE, INTAKE, FLM

FREIGHTLINER® LLC

THE INFORMATION CONTAINED HEREIN IS PROPRIETARY DATA, AND IS NOT FOR DISSEMINATION OR DISCLOSURE, IN WHOLE OR IN PART, FOR ANY PURPOSE OTHER THAN THAT FOR WHICH IT IS SUBMITTED, EXCEPT AS AUTHORIZED IN WRITING BY FREIGHTLINER LLC.

MATERIAL APPROVAL	DATE	UNLESS OTHERWISE NOTED, DIMENSIONS AND TOLERANCES ARE DEFINED ACCORDING TO ASME STANDARD Y14.5M-1994, WITH EXCEPTIONS PER FREIGHTLINER EOSM 09E0-K17.	
DRAWN BY J.MEDOVARSKY	DATE 01/23/02		
CHECKED BY C.TRABANT	DATE 01/23/02	THIRD ANGLE PROJECTION	UNITS OF MEASURE MM
RESPONSIBLE ENGINEER C.TRABANT	DATE 01/23/02		
APPROVED BY C.TRABANT	DATE 01/23/02	MFG ENGR/PURCH AGENT R.TRANCHESE	DATE 01/15/08

DESCRIPTION: INSTL-GRILLE, INTAKE, FLM
SUPPLEMENTARY DESCRIPTION: 644A1-FLM

ITEM/DRAWING NUMBER	REVISION LETTER	SHEET NUMBER
D17-14820	A	1 OF 1

D-SIZE