RELEASE NUMBER	REV LTR	REVISION DESCRIPTION	BY	DATE	APPD
PLIA07-J8	D	1.REVISED AND REDRAWN IN PPT FORMAT 2. UPDATED TORQUE NOTE	KVB	10/28/21	DRG

1. TORQUE ITEM 3 TO 4 - 5.FT*LB D2

ITEM NUMBER	DESCRIPTION
INSTL-GRILLE,HWY,M2,W/STUD	D17-14294-001
INSTL-GRILLE,HWY,M2	D17-14294-000

DAIMLER

Daimler Trucks North America

THE INFORMATION CONTAINED HEREIN IS PROPRIETARY DATA, AND IS NOT FOR DISSEMINATION OR DISCLOSURE, IN WHOLE OR IN PART, FOR ANY PURPOSE OTHER THAN THAT FOR WHICH IT ISSUBMITTED, EXCEPT AS AUTHORIZED IN WRITING BY DAIMLER TRUCKS NORTH AMERICA LLC (DTNA)

MATERIAL APPROVAL: N/A	DATE: N/A	UNLESS OTHERWISE NOTED, DIMENSIONS AND TOLERANCESARE DEFINED ACCORDING TO ASME Y14.5M- 1994,WITH EXCEPTION PER DTNA 09ENG-WI037
DRAWN BY: K.BHAT	DATE: 10/28/21	
CHECKED BY: R. CARVAJAL	DATE: 10/28/21	
RESPONSIBLE ENGINEER: A.JULIEN	DATE: 10/28/21	THIRD ANGLE PROJECTION
APPROVED BY: D. GROMLICH	DATE: 10/28/21	UNITS OF MEASURE: MM

DESCRIPTION: INSTL-GRILLE,HWY

SUPPLEMENTAL DESCRIPTION: 646A1

ITEM/DRAWING NUMBER	REVISION LETTER	PAGE
D17-14294	D	1 of 3

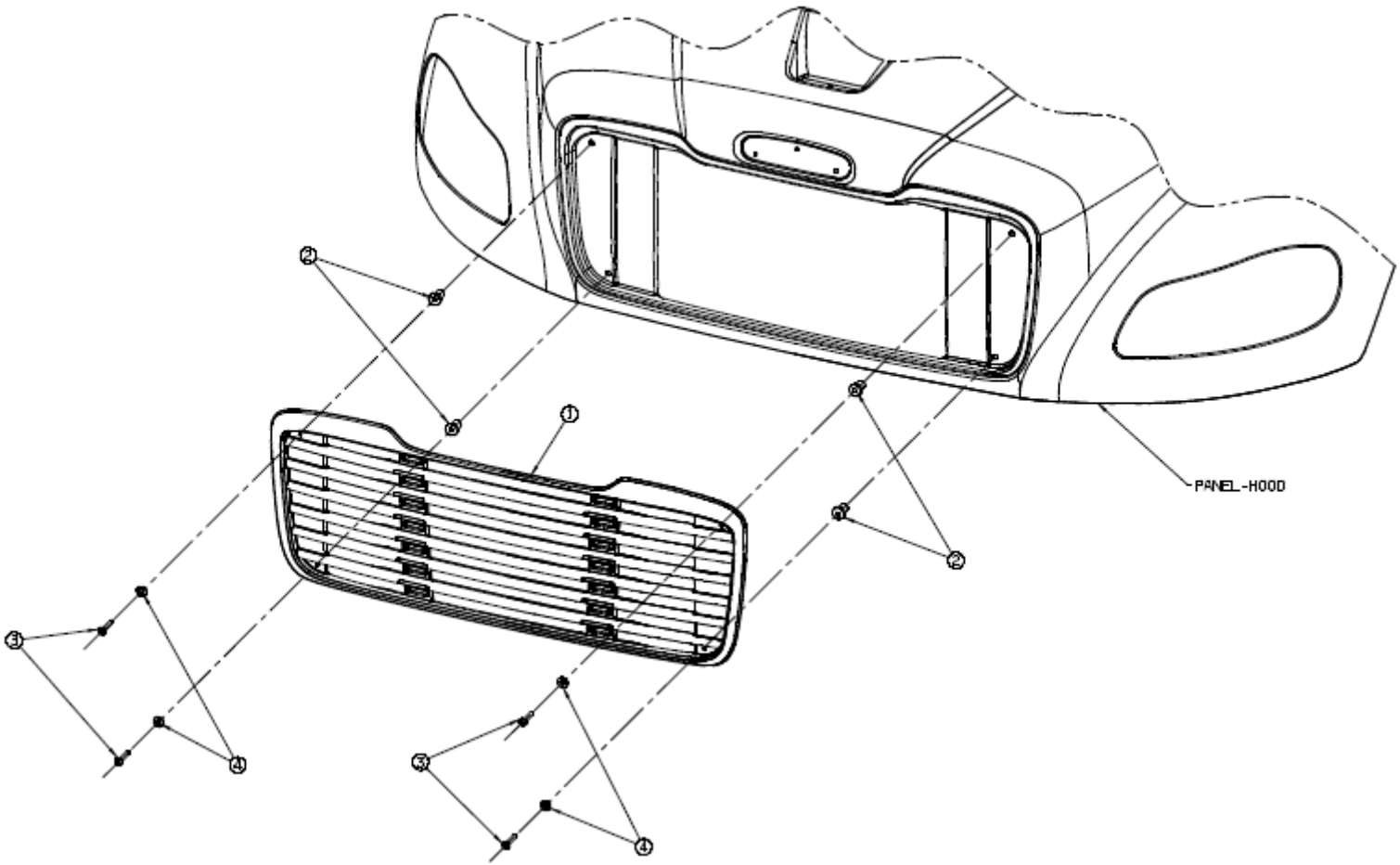

-000 SHOWN

THE INFORMATION CONTAINED HEREIN IS PROPRIETARY DATA, AND IS NOT FOR DISSEMINATION OR DISCLOSURE, IN WHOLE OR IN PART, FOR ANY PURPOSE OTHER THAN THAT FOR WHICH IT ISSUBMITTED, EXCEPT AS AUTHORIZED IN WRITING BY DAIMLER TRUCKS NORTH AMERICA LLC (DTNA)

DAIMLER	Daimler Trucks North America	ITEM/DRAWING NUMBER	REVISION LETTER	PAGE
		D17-14294	C	2 of 3

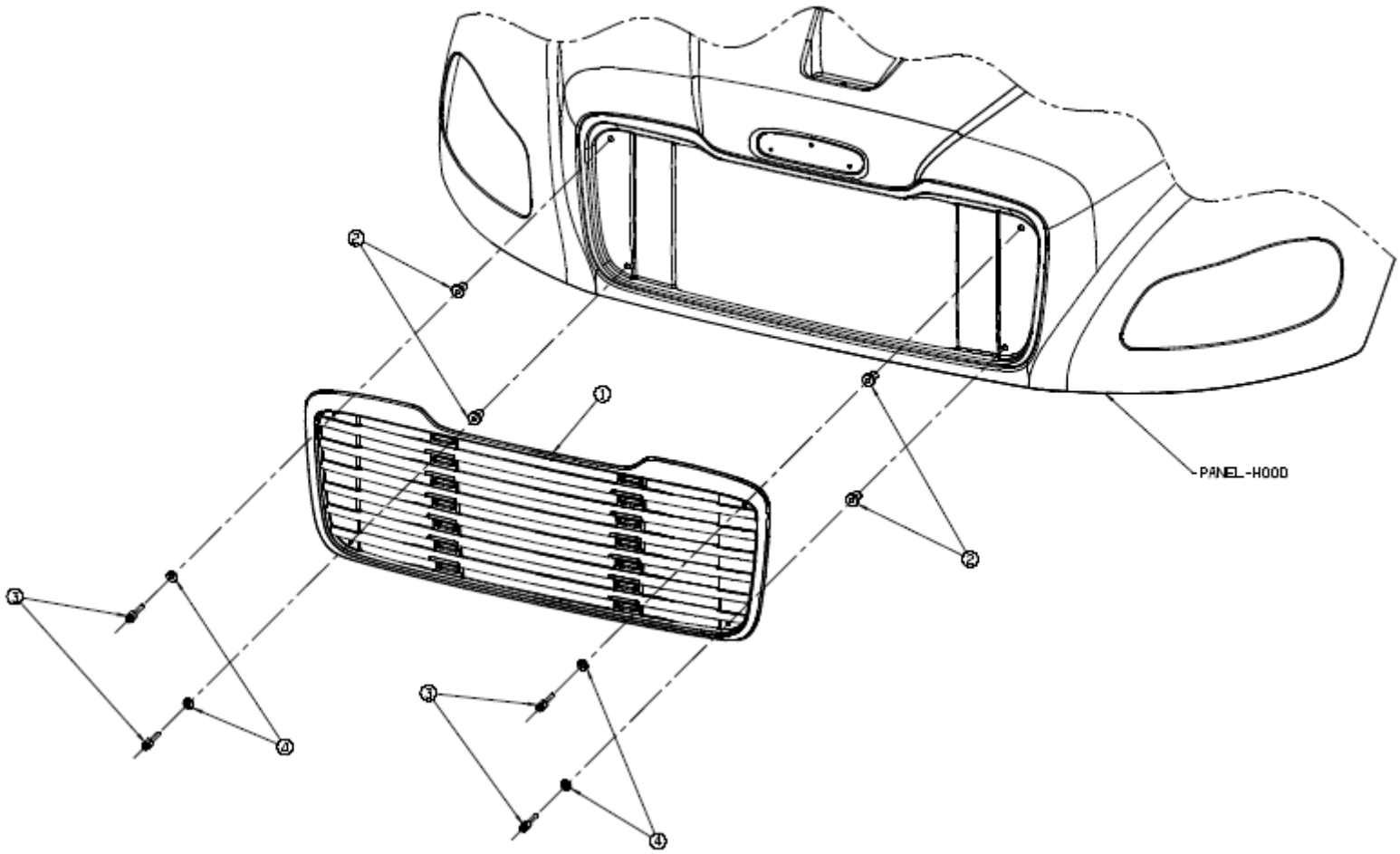

-001 SHOWN

WINTERFRONT INSTALLATION

THE INFORMATION CONTAINED HEREIN IS PROPRIETARY DATA, AND IS NOT FOR DISSEMINATION OR DISCLOSURE, IN WHOLE OR IN PART, FOR ANY PURPOSE OTHER THAN THAT FOR WHICH IT ISSUBMITTED, EXCEPT AS AUTHORIZED IN WRITING BY DAIMLER TRUCKS NORTH AMERICA LLC (DTNA)

DAIMLER	Daimler Trucks North America	ITEM/DRAWING NUMBER	REVISION LETTER	PAGE
		D17-14294	D	3 of 3