| RELEASE NUMBER | REV LTR | ZONE | REVISION DESCRIPTION | BY | DATE | APPD |
|---|---|---|---|---|---|---|
| PH0728-26 | A | XX | INITIAL RELEASE TO PRODUCTION | BWA | 04/01/96 | PRH |
| PH0728-55 | B | | ADDED NOTES 1 & 2 | DRW | 04/25/97 | PRH |
| PH0704-10 | C | | REVISED & REDRAWN | DRW | 06/19/98 | PRH |
| P19586-01 | D | | SEE SHEET 2 | DRW | 09/26/02 | PRH |
| P24640-01 | E | | SEE SHEET 2 | GRB | 04/14/04 | DJJ |
| P28701-36 | F | 2B | 1-REMOVE "LOW CHAS" FROM DESCP | TVM | 08/19/05 | DJJ |
| | | | SEE SHEET 2 | | | |
| P33614-M7 | G | | SEE SHEET 2 | NCC | 11/02/07 | TJO |
| P39979-E0 | H | - | MODEL CONVERTED FROM V4 TO V5 | CL | 11/19/10 | PRH |
| | | | SEE SHEET 2 | | | |
| P41487-J1 | J | | 1. SEE SHEET 2 | CAA | 03/15/11 | PRH |

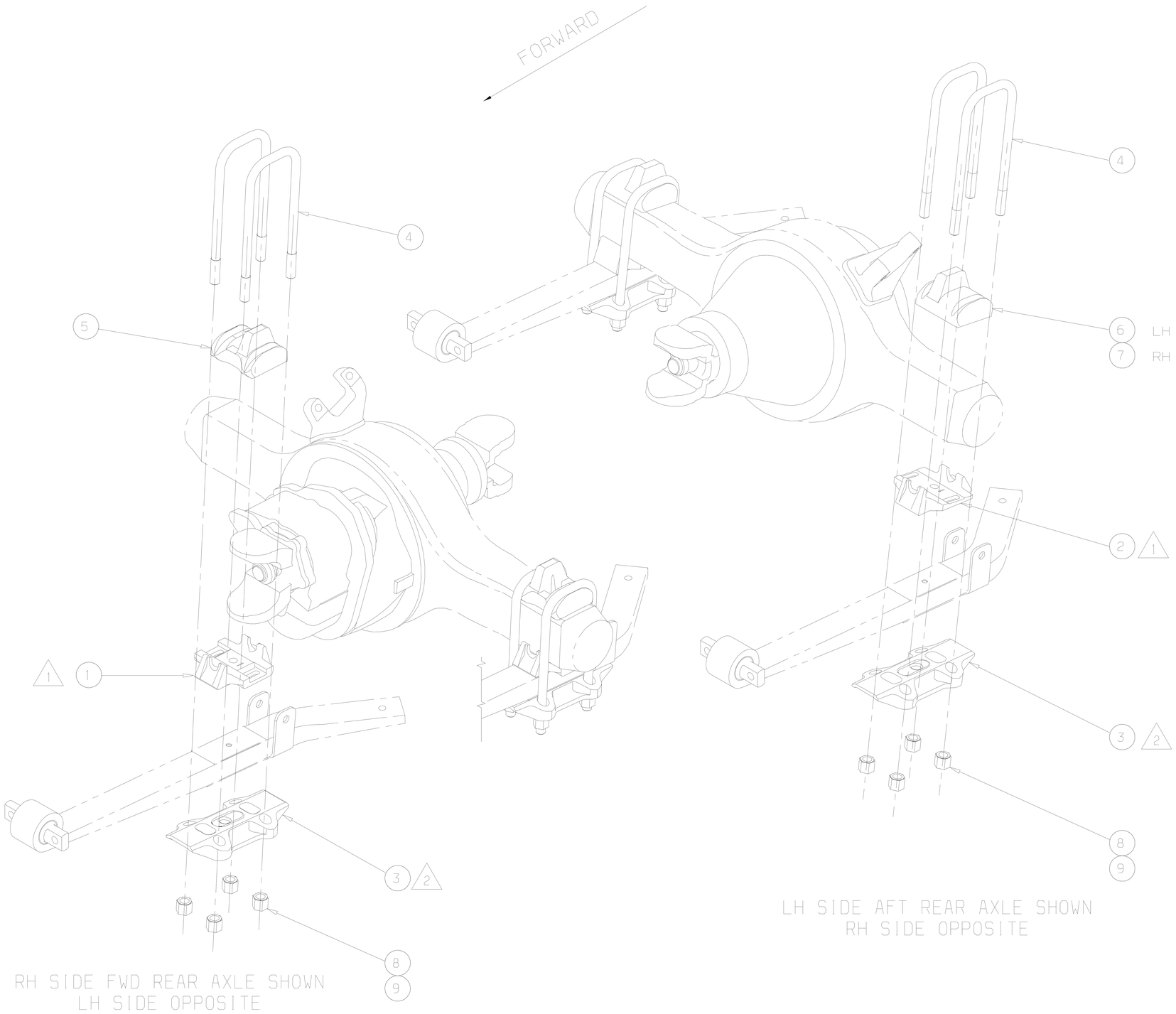


1 SEE CHART ON PG 2 FOR AXLE SEAT ORIENTATION.

2 SEE CHART ON PG 2 FOR U-BOLT RETAINER ARROW ORIENTATION.

F

ITEM NUMBER: D16-14339-000

DESCRIPTION: INST-CLAMP GRP, A/L

**DAIMLER**

Daimler Trucks North America

THE INFORMATION CONTAINED HEREIN IS CONFIDENTIAL AND PROPRIETARY TO DAIMLER TRUCKS NORTH AMERICA LLC (DTNA) AND SHALL NOT BE COPIED, REPRODUCED, DISCLOSED, PUBLISHED, OR USED FOR ANY PURPOSE WITHOUT THE EXPRESS WRITTEN PERMISSION OF DTNA

| | | |
|---|---|---|
| MATERIAL APPROVAL: N/A | DATE: N/A | UNLESS OTHERWISE NOTED, DIMENSIONS AND TOLERANCES ARE DEFINED ACCORDING TO ASME STANDARD Y14.5M-1994, WITH EXCEPTIONS PER DTNA 09ENG-W1037. |
| DRAWN BY: D. WHEELER | DATE: 06/19/98 | |
| CHECKED BY: M. DURANT | DATE: 06/29/98 | |
| RESPONSIBLE ENGINEER: D. WHEELER | DATE: 06/19/98 | THIRD ANGLE PROJECTION |
| APPROVED BY: P. HYNES | DATE: 06/19/98 | UNITS OF MEASURE: MM |

DESCRIPTION: INSTL-CLAMP GRP, A-L, MONOLEAF

SUPPLEMENTARY DESCRIPTION: 431A1

| ITEM/DRAWING NUMBER | REV LETTER | SHEET NUMBER |
|---|---|---|
| D16-14339 | J | 1 OF 2 |

CATIA V5 1 D-SIZE

| RELEASE NUMBER | REV LTR | ZONE | REVISION DESCRIPTION | BY | DATE | APPD |
|---|---|---|---|---|---|---|
| PH0728-26 | A | XX | INITIAL RELEASE TO PRODUCTION | BWA | 04/01/96 | PRH |
| PH0728-55 | B | XX | ADDED NOTES 1 & 2 | DRW | 04/25/97 | PRH |
| PH0704-10 | C | XX | REVISED & REDRAWN | DRW | 06/19/98 | PRH |
| P19586-01 | D | 8B | ADDED MT40-143 DATA | DRW | 09/26/02 | BRG |
| P24640-01 | E | 8B | ADDED ART-XX-4, DANA DST40 | GRB | 04/14/04 | DJJ |
| P28701-36 | F | 8B | 2: "HI" WAS "STD" | TVM | 08/19/05 | DJJ |
| | | 6B | 3: "ART" WAS "AAC MDL 4" | | | |
| | | | SEE SHEET 1 | | | |
| P33614-M7 | G | 8B | ADDED NEW ROW FOR DXX-170 | NCC | 11/02/07 | TJO |
| P39979-E0 | H | - | SEE SHEET 1 | CL | 11/19/10 | PRH |
| P41487-J1 | J | 7B | 1. ADDED NOTE 1 AND 2 TO CLARIFY | CAA | 03/15/11 | PRH |
| | | | AXLE PLANING ANGLES. | | | |

# CLAMP GROUP ORIENTATION

H2 H3

| | RIDE HGT | SUSP | AXLE | MT-XX-14X AXLE PINION CODE | AXLE SPACING | THICK SIDE OF SEAT | | U-BOLT RETAINER | |
|---|---|---|---|---|---|---|---|---|---|
| | | | | | | FWD AXLE | AFT AXLE | FWD AXLE | AFT AXLE |
| F2 | HI | 40K | RT34/40/44-145, MT-H △2 | 420-FJ2 | 51/55" | AFT | FWD | AFT | FWD |
| F2 | HI | 40K | ETN 404 | | 51/55" | AFT | FWD | AFT | FWD |
| F2 | HI | 40K | RT34/40/44-145 & 404, MT-A △1 | 420-FJ1 | 59" | AFT | AFT | AFT | AFT |
| | 7.81" | 40K | RT34/40/44-145, MT-H △2 | 420-FJ2 | 51/55" | AFT | FWD | AFT | FWD |
| | 7.81" | 40K | ETN 404 | | 51/55" | AFT | FWD | AFT | FWD |
| | LOW | 40K | RT34/40/44-145, MT-H △2 | 420-FJ2 | 51" | AFT | FWD | AFT | FWD |
| | LOW | 40K | ETN 404 | | 51" | AFT | FWD | AFT | FWD |
| | MID | 40K | RT34/40/44-145, MT-H △2 | 420-FJ2 | 51" | AFT | FWD | AFT | FWD |
| D,E | MID | 40K | ETN 404 F3 | | 51" | AFT | FWD | AFT | FWD |
| G | HI, MID | 40K | ART, MT40-143, ETN DST40, MT-A △1 | 420-FJ1 | 51/55/59" | AFT | AFT | AFT | AFT |
| | HI | 40K | DXX-170 | | 51/55/59" | AFT | FWD | AFT | FWD |

△1 MT-A:MT-XX-14X AMBOID SEE 420 GEN CODE FOR PLANING ANGLE.

J1

△2 MT-H:MT-XX-14X HYPOID SEE 420 GEN CODE FOR PLANING ANGLE.

DAIMLER

Daimler Trucks North America

THE INFORMATION CONTAINED HEREIN IS CONFIDENTIAL AND PROPRIETARY TO DAIMLER TRUCKS NORTH AMERICA LLC (DTNA) AND SHALL NOT BE COPIED, REPRODUCED, DISCLOSED, PUBLISHED, OR USED FOR ANY PURPOSE WITHOUT THE EXPRESS WRITTEN PERMISSION OF DTNA

MATERIAL APPROVAL N/A DATE N/A

DRAWN BY D. WHEELER DATE 06/19/98

CHECKED BY M. DURANT DATE 06/29/98

RESPONSIBLE ENGINEER D. WHEELER DATE 06/19/98

APPROVED BY P. HYNES DATE 06/19/98

UNLESS OTHERWISE NOTED, DIMENSIONS AND TOLERANCES ARE DEFINED ACCORDING TO ASME STANDARD Y14.5M-1994, WITH EXCEPTIONS PER DTNA 09ENG-W1037.

THIRD ANGLE PROJECTION

UNITS OF MEASURE MM

DESCRIPTION INSTL-CLAMP GRP, A-L, MONOLEAF

SUPPLEMENTARY DESCRIPTION 431A1

ITEM/DRAWING NUMBER D16-14339

REV LETTER J

SHEET NUMBER 2 OF 2

CATIA V5 1 D-SIZE