RELEASE NUMBER	REV LTR	ZONE	REVISION DESCRIPTION	BY	DATE	APPD
H83522-07	-	-	INITIAL RELEASE	JFH	07/25/00	SST
J67759-01	A	D3.6	REVISED PUMP LOCATION	NLB	06/14/01	SST
P26840-88	B	-	CHANGE STATUS: 'S' TO 'A'	AHW	12/21/04	SST

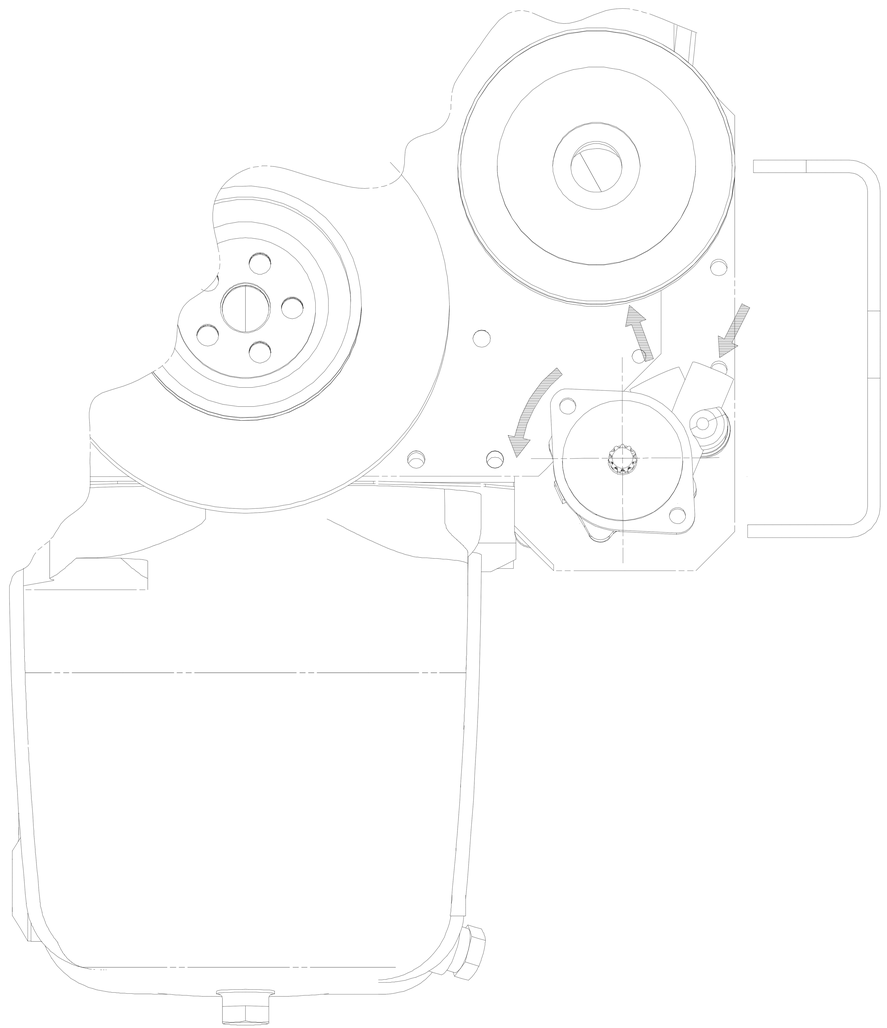

FRONT VIEW

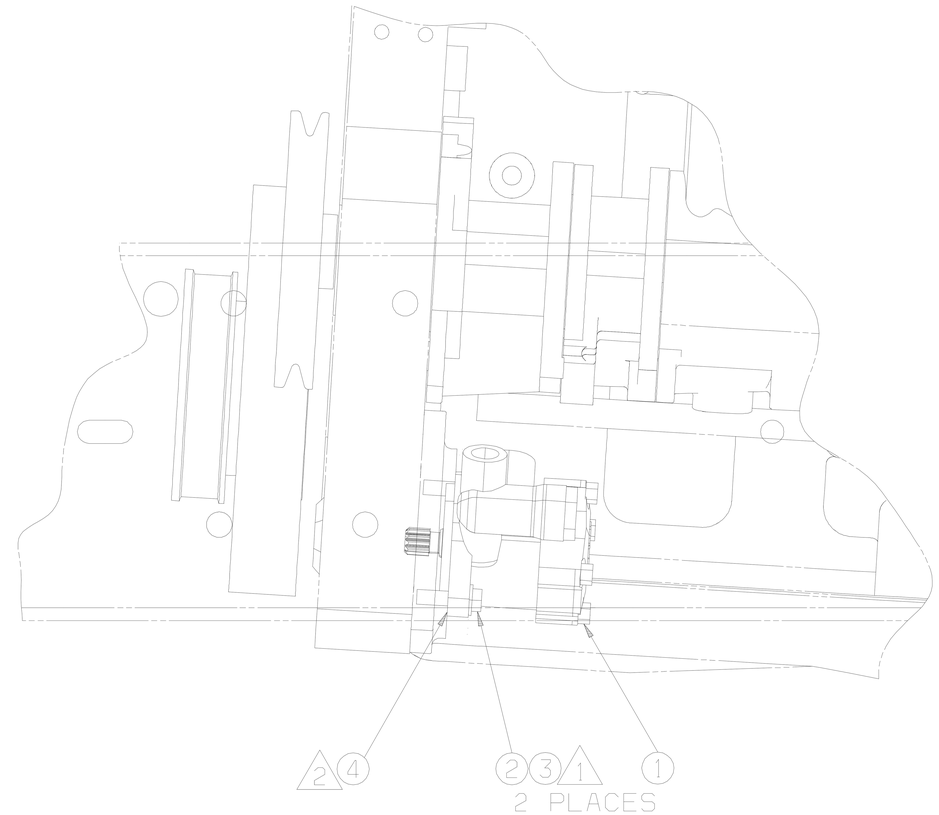

LEFT SIDE VIEW

1. TORQUE TO 32-37 FT/LBS
2. REMOVE AND DISCARD COVER PLATE AND GASKET BEFORE INSTALLING NEW GASKET AND PUMP.

ITEM NUMBER D14-14386-000

DESCRIPTION INSTL-PWR STRG PUMP,M11,TRW,EV

FREIGHTLINER® LLC

THE INFORMATION CONTAINED HEREIN IS PROPRIETARY DATA, AND IS NOT FOR DISSEMINATION OR DISCLOSURE, IN WHOLE OR IN PART, FOR ANY PURPOSE OTHER THAN THAT FOR WHICH IT IS SUBMITTED, EXCEPT AS AUTHORIZED IN WRITING BY FREIGHTLINER LLC.

MATERIAL APPROVAL N/A	DATE	UNLESS OTHERWISE NOTED, DIMENSIONS AND TOLERANCES ARE DEFINED ACCORDING TO ASME STANDARD Y14.5M-1994, WITH EXCEPTIONS PER FREIGHTLINER EOSM 09E0-K17.
DRAWN BY J.HAINES	DATE 07/25/00	
CHECKED BY D.WERNER	DATE 07/25/00	THIRD ANGLE PROJECTION — UNITS OF MEASURE MM
RESPONSIBLE ENGINEER D.WERNER	DATE 07/25/00	
APPROVED BY S.TABARI	DATE 07/25/00	MFG ENGR/PURCH AGENT A.AGGARWAL — DATE 12/22/04

DESCRIPTION INSTL-PWR STRG PUMP,M11,TRW,EV

SUPPLEMENTARY DESCRIPTION 539A1

ITEM/DRAWING NUMBER	REVISION LETTER	SHEET NUMBER
D14-14386	B	1 OF 1

DO NOT SCALE COPIES OF THIS DRAWING

LAST FILE= 05/01/05 15:57 SHEET FILE= BSIZ SHEET B . INSTL-PWR STRG PUMP,M11,TRW,EV FPL862
PLOT DATE= JANUARY 5, 2005 PLOT TIME= 15:57 USER ID= CATIA DRAW ID= D14-14386 . B . DWG FILE LOC = PDX CATIA