RELEASE NUMBER	REV LTR	ZONE	REVISION DESCRIPTION	BY	DATE	APRD
P24698-05	-	-	INITIAL RELEASE	ASM	10/06/05	TJO
P24698-06	A	-	REMOVE 3,4,5 BALL.	HSB	06/22/06	TJO
P24698-18	B	5B	MODULE 342 WAS MODULE 34P	MPK	07/15/06	TJO
P24698-24	C		WAS 772.	HSB	10/17/06	TJO
P24698-26	D	2H	1. WAS 45°	IIK	04/16/07	DJJ
		4A	2. ADDED NOTE 6			
P35911-10	E	4A	1: ADDED METRIC TORQUE	JPS	10/27/08	MIM
		4A	2: ADDED METRIC TORQUE			
		7F	3: ADDED 48-00094-141 CALLOUT			

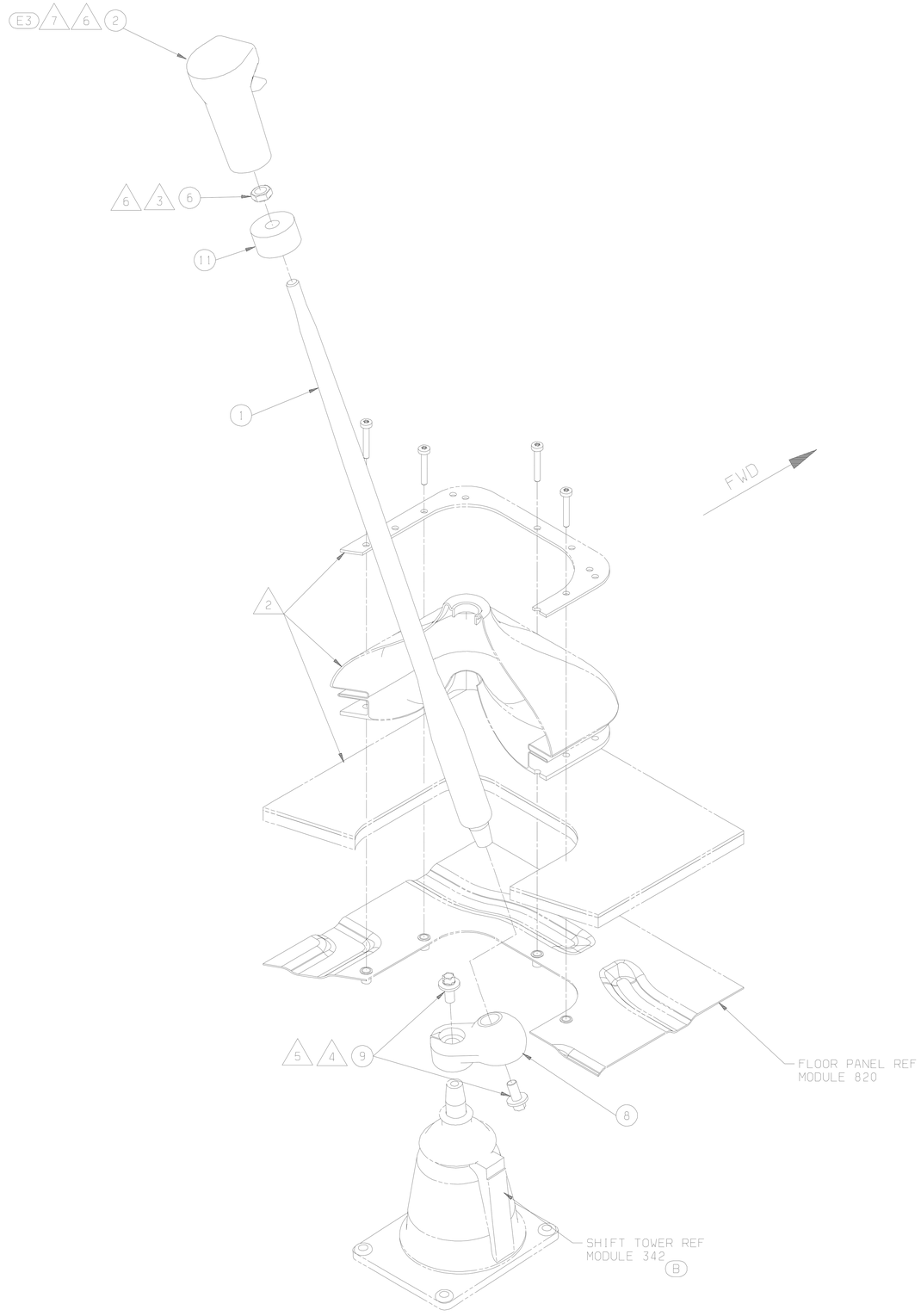

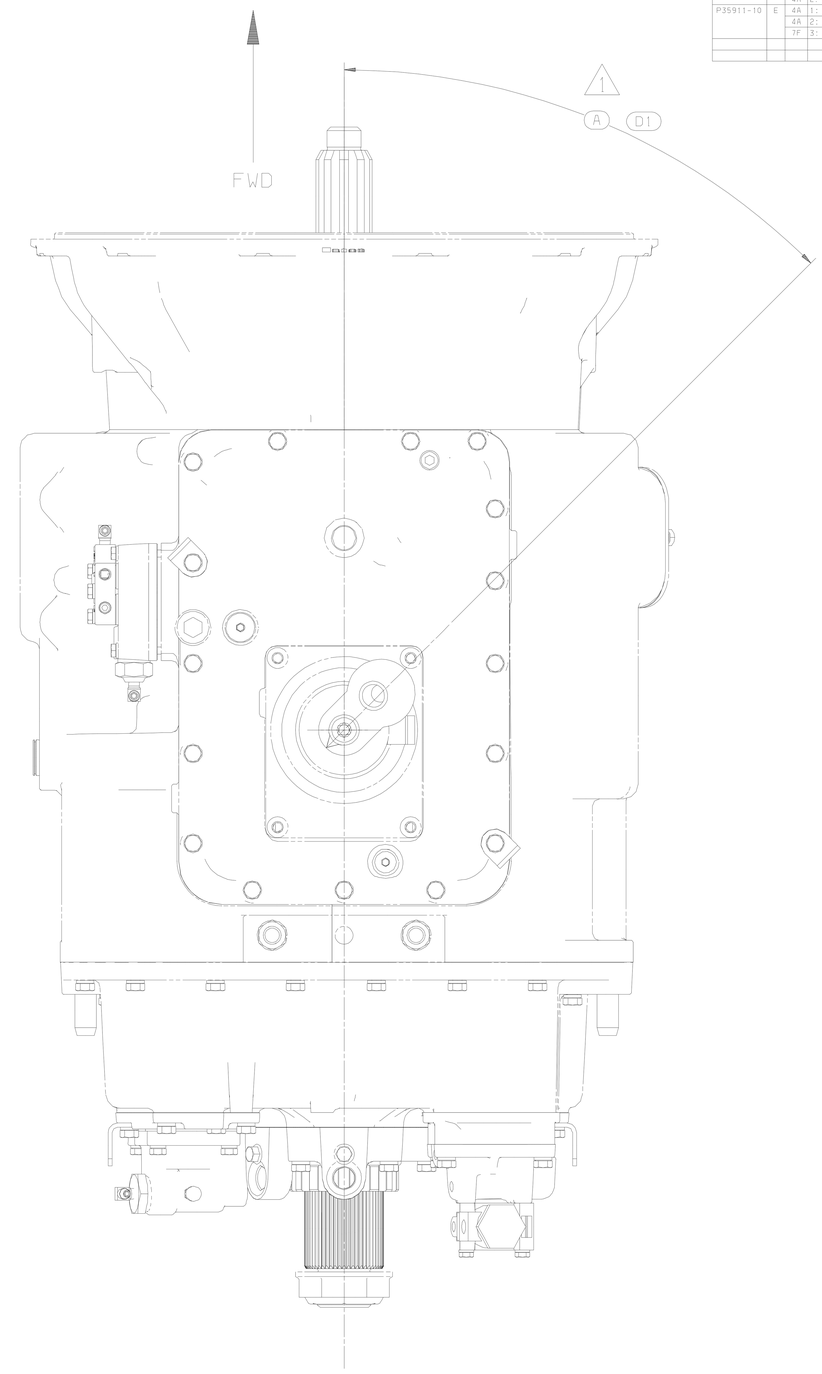

TOP VIEW OF TRANSMISSION

1. DASH NO. INDICATES "A" DIMENSION IN DEGREES.
   EXAMPLES: -030 = 30°
   -175 = 175°
2. INSULATION, FLOOR COVERING, BOOT, AND BOOT RETAINER CUT AWAY FOR CLARITY. REF MOD 73E (C)
3. (E1) TORQUE 1/2-13 JAM NUT TO 23±4 Nm (17±3 LB-FT).
4. APPLY 3-4 DROPS OF LOCTITE 48-00094-131 HALFWAY DOWN THREADS BEFORE INSTALLING.
5. (E2) TORQUE M10 X 1.5 SCREWS TO 95±4 Nm (70±3 LB-FT).
6. (D2) SHIFT KNOB MUST ALIGN TO ±5° FROM STRAIGHT FORWARD AFTER JAM NUT IS TORQUED.
7. (E3) APPLY 3-4 DROPS LOCTITE BLUE 48-00094-141 HALFWAY DOWN THREADS BEFORE INSTALLING KNOB.

1

ITEM NUMBER: D07-18800-***
DESCRIPTION: INSTL-SHIFT LEVER,UNSYNC,P3

DAIMLER TRUCKS NORTH AMERICA LLC

THE INFORMATION CONTAINED HEREIN IS PROPRIETARY DATA, AND IS NOT FOR DISSEMINATION OR DISCLOSURE, IN WHOLE OR IN PART, FOR ANY PURPOSE OTHER THAN THAT FOR WHICH IT IS SUBMITTED, EXCEPT AS AUTHORIZED IN WRITING BY FREIGHTLINER LLC.

MATERIAL APPROVAL: N/A	DATE	UNLESS OTHERWISE NOTED, DIMENSIONS AND TOLERANCES ARE DEFINED ACCORDING TO ASME STANDARD Y14.5M-1994, WITH EXCEPTIONS PER FREIGHTLINER EOSM 09E0-K17.
DRAWN BY: A.MAYZUS	DATE: 10/06/05	
CHECKED BY: T.O'NEAL	DATE: 10/20/06	
RESPONSIBLE ENGINEER: A.MAYZUS	DATE: 10/06/05	THIRD ANGLE PROJECTION — UNITS OF MEASURE: MM
APPROVED BY: T.O'NEAL	DATE: 10/06/05	MFG ENGR/PURCH AGENT: M.OZGUR — DATE: 11/03/08

DESCRIPTION: INSTL-SHIFT LEVER,UNSYNC,P3
SUPPLEMENTARY DESCRIPTION: 345A1

ITEM/DRAWING NUMBER	REVISION LETTER	SHEET NUMBER
D07-18800	E	1 OF 1

LAST FILE- 09/11/13 07:58 PLOT TIME- 07:59 SHEET FILE- PLOT DATE- NOVEMBER 13, 2008 USER ID- CRT1A DRAW ID- DWG-07-18800 SHEET 1 OF 1

DO NOT SCALE COPIES OF THIS DRAWING

E-SIZE