RELEASE NUMBER	REV LTR	ZONE	REVISION DESCRIPTION	BY	DATE	APPD
P24612-10	X-	-	INITIAL RELEASE	AJP	07/29/05	CJP
P24612-XX	A	-	"R" STATUS RELEASE	AJP	02/24/06	CJP
P24612-58	B	-	"A" STATUS	JCR	09/06/06	CJP
P24612-81	C	-	UPDATE NAMES IN TITLE BLOCK	JCR	07/03/07	CJP
P37495-02	D	B7-B8	UPDATED CALLOUTS "3", "4" AND "5"	TJK	03/05/09	DJJ
P39284-02	E	-	UPDATED TORQUE NOTES	M6P	06/22/10	DJJ

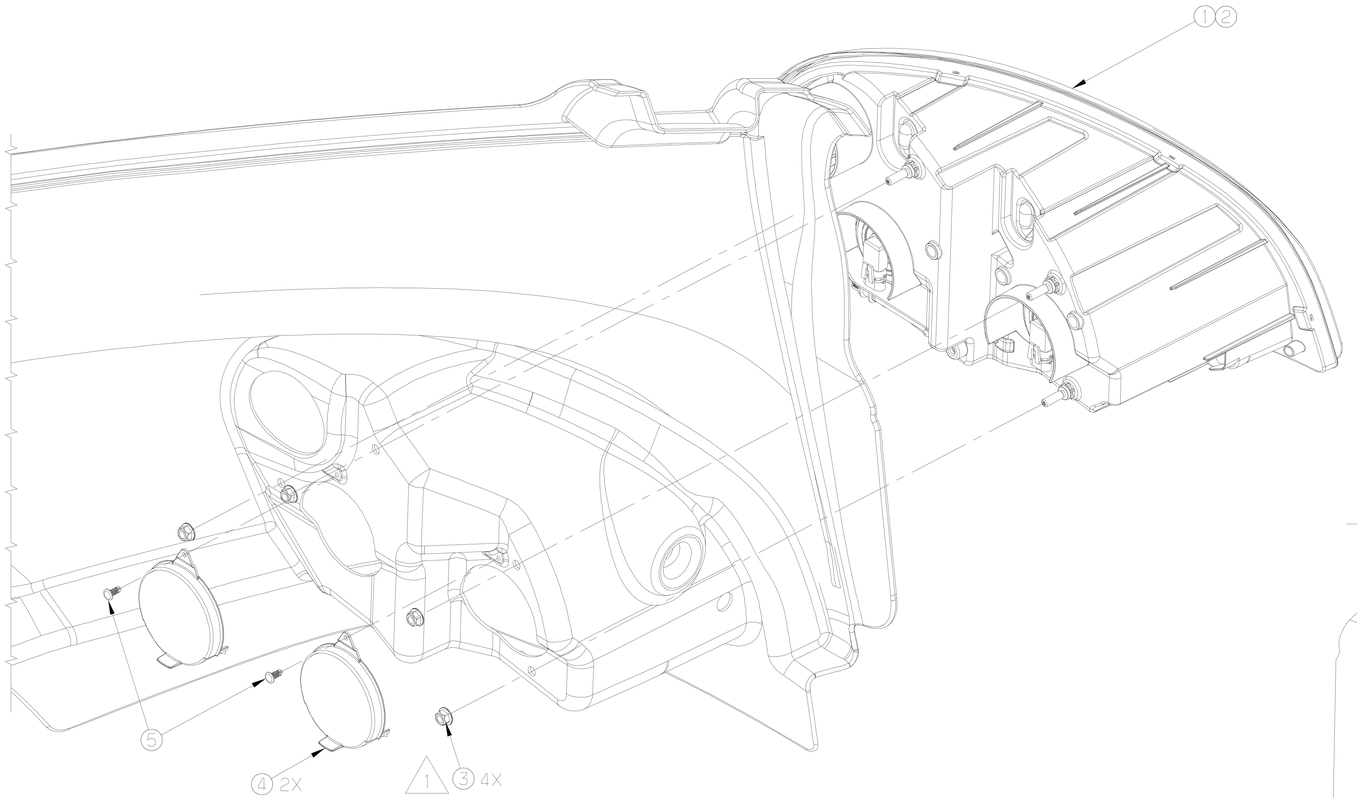

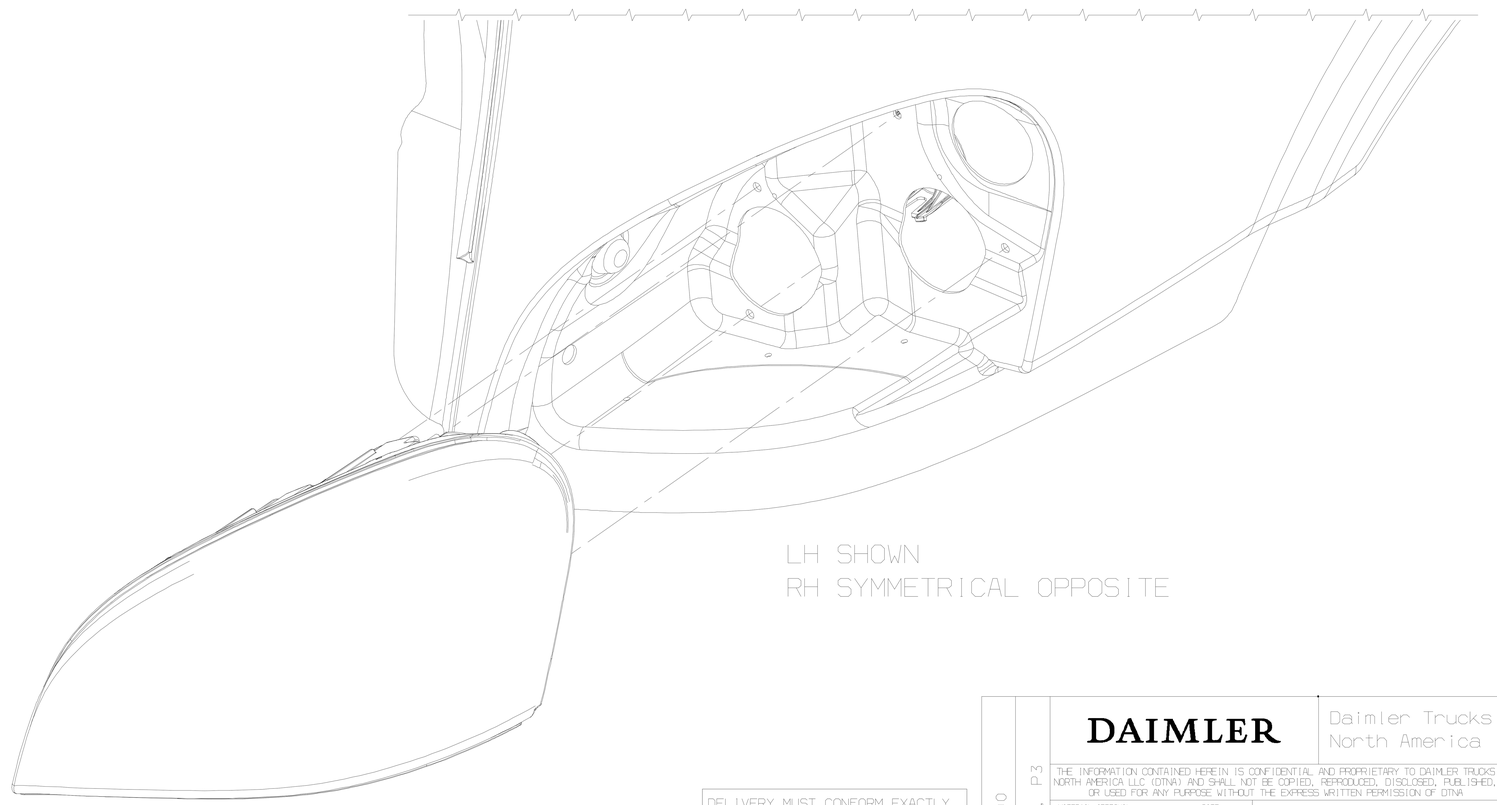

LH SHOWN
RH SYMMETRICAL OPPOSITE

1 TORQUE M8 FASTENERS TO 10.0±1 N.M (7.5LBS-FT)
TORQUE M6 FASTENERS TO 7.25±1 N.M (5.5LBS-FT)

DELIVERY MUST CONFORM EXACTLY WITH DRAWING SPECIFICATIONS AND, WHERE REQUIRED BY Q.A., WITH APPROVED Q.A. SAMPLES. ABSOLUTELY NO CHANGES ARE PERMITTED WITHOUT PRIOR APPROVAL BY DAIMLER TRUCKS NORTH AMERICA LLC. THIS INCLUDES CHANGES TO: SOFTWARE, MATERIALS, INTERNAL COMPONENTS, MANUFACTURING PROCESSES.

ITEM NUMBER D06-54906-000
DESCRIPTION INSTL-HEADLAMP, P3

DAIMLER Daimler Trucks North America

THE INFORMATION CONTAINED HEREIN IS CONFIDENTIAL AND PROPRIETARY TO DAIMLER TRUCKS NORTH AMERICA LLC (DTNA) AND SHALL NOT BE COPIED, REPRODUCED, DISCLOSED, PUBLISHED, OR USED FOR ANY PURPOSE WITHOUT THE EXPRESS WRITTEN PERMISSION OF DTNA

MATERIAL APPROVAL B.KASHIWAGI	DATE 07/28/05	UNLESS OTHERWISE NOTED, DIMENSIONS AND TOLERANCES ARE DEFINED ACCORDING TO ASME STANDARD Y14.5M-1994, WITH EXCEPTIONS PER DTNA 09ENG-W1037.
DRAWN BY A.PONTON	DATE 07/29/05	
CHECKED BY B.KASHIWAGI	DATE 07/29/05	THIRD ANGLE PROJECTION — UNITS OF MEASURE MM
RESPONSIBLE ENGINEER C.JONG	DATE 07/29/05	
APPROVED BY D.WELLS	DATE 07/29/05	MFG ENGR/PURCH AGENT G.KNIPS — DATE 07/11/07

DESCRIPTION
INSTL-HEADLAMP, P3
SUPPLEMENTARY DESCRIPTION
312A1

ITEM/DRAWING NUMBER	REV LETTER	SHEET NUMBER
D06-54906	E	1 OF 2

CATIA V5 1 D-SIZE