RELEASE NUMBER	REV LTR	ZONE	REVISION DESCRIPTION	BY	DATE	APPD
P07552-23	-	-	INITIAL RELEASE	JDB	10/04/01	MLC
P23207-07	A	E8	REMOVED ITEM#5 & NOTE 3.	ETM	11/12/03	MLC

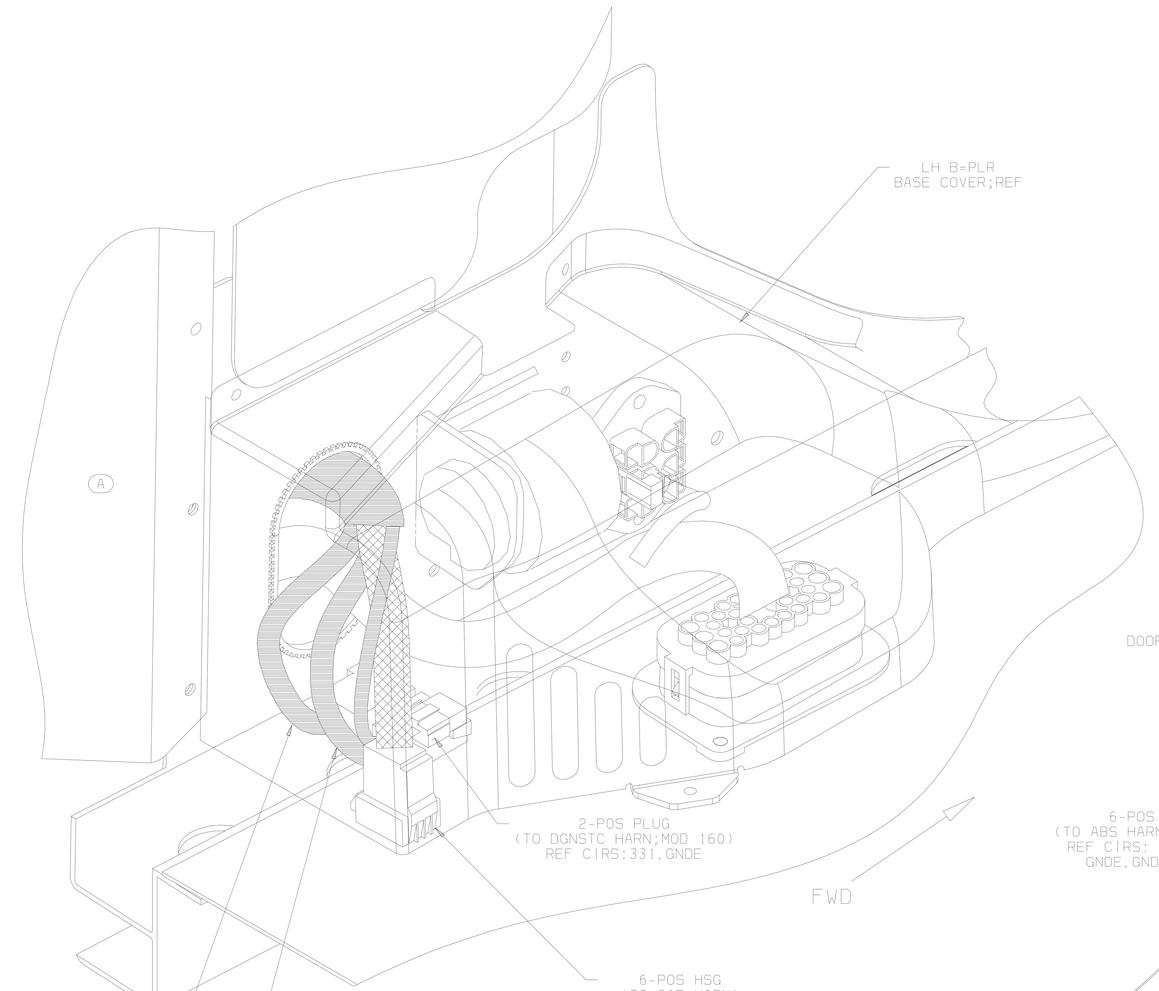

VIEW A

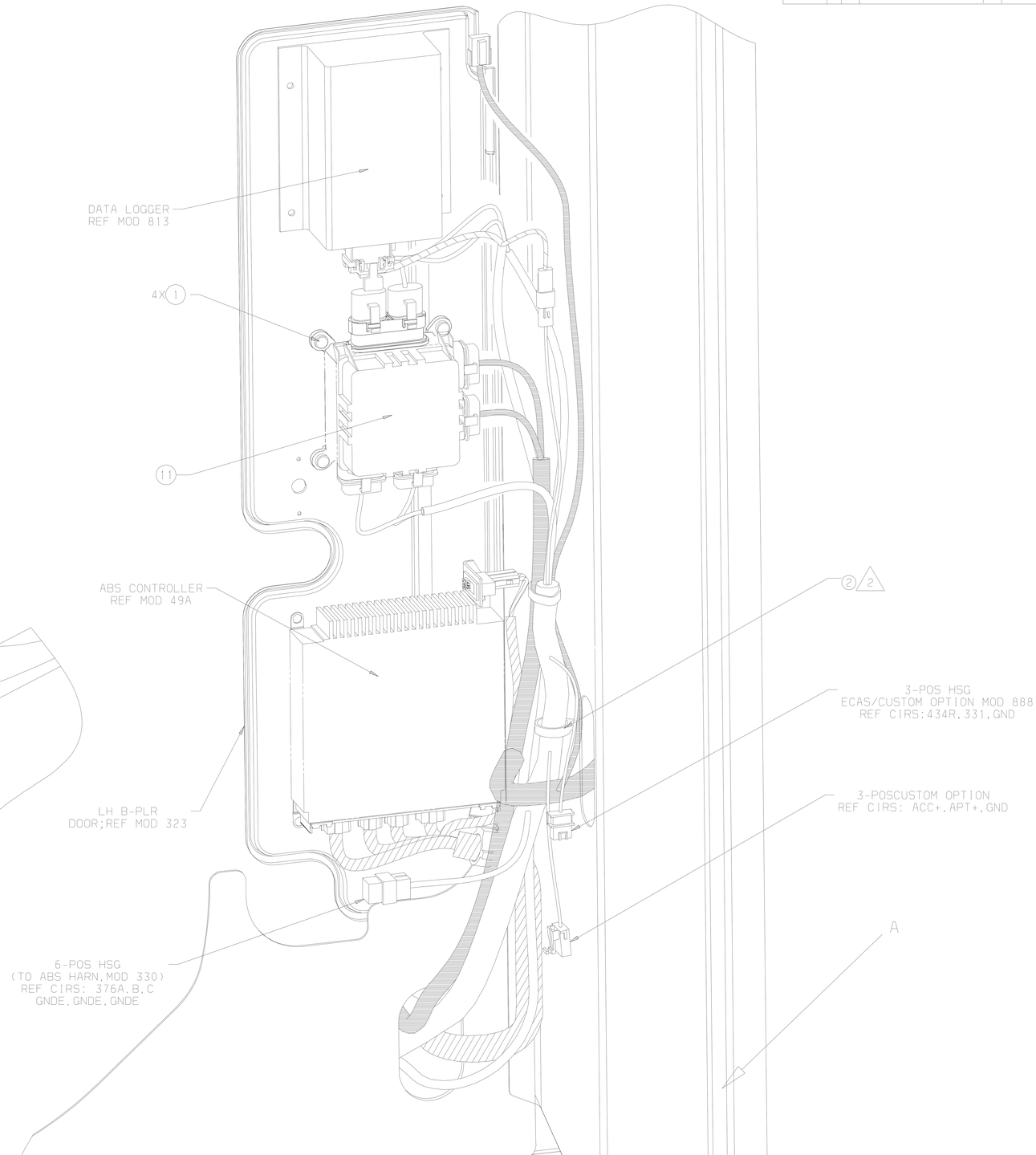

1 TORQUE PDM FASTENERS TO MAX OF 13 IN/LBS.

2 SECURE PDM HARN TO B-PILLAR WITH ITEM 2 BUTTON-TIE STRAP.

A

-000

PDM B-PLR HARNESS INSTL
VIEW OF OUTBOARD SIDE OF LH B-PLR
(CAB SKIN NOT SHOWN)
(SLPR CAB SHOWN DAY CAB SIMILAR)

ITEM NUMBER D06-42489-001
DESCRIPTION REMOTE PDM INSTL PLASTIC BOX
ITEM NUMBER D06-42489-000
DESCRIPTION REMOTE PDM INSTL B-PLR DOOR

FREIGHTLINER® LLC

THE INFORMATION CONTAINED HEREIN IS PROPRIETARY DATA, AND IS NOT FOR DISSEMINATION OR DISCLOSURE, IN WHOLE OR IN PART, FOR ANY PURPOSE OTHER THAN THAT FOR WHICH IT IS SUBMITTED, EXCEPT AS AUTHORIZED IN WRITING BY FREIGHTLINER LLC.

MATERIAL APPROVAL	DATE	UNLESS OTHERWISE NOTED, DIMENSIONS AND TOLERANCES ARE DEFINED ACCORDING TO ASME STANDARD Y14.5M-1994, WITH EXCEPTIONS PER FREIGHTLINER EQSM 09EG-K17.
DRAWN BY J. BELDING	DATE 10/22/01	
CHECKED BY E. MEDAU	DATE 10/22/01	THIRD ANGLE PROJECTION — UNITS OF MEASURE MM
RESPONSIBLE ENGINEER O. COLLETT	DATE 10/22/01	
APPROVED BY M. CUMMINS	DATE 10/22/01	MFG ENGR/PURCH AGENT R. GRIMES — DATE 10/22/03

DESCRIPTION INSTL-PDM, REMOTE B-PLR

SUPPLEMENTARY DESCRIPTION 285A1-LH DOOR MTD PDM

ITEM/DRAWING NUMBER	REVISION LETTER	SHEET NUMBER
D06-42489	A	1 OF 1

LAST FILE- 04/01/20 16:21 PLOT DATE- JANUARY 20, 2004 PLOT TIME- 16:21 SHEET FILE- BSIZ.SHEET USER ID- CATIA DRAW ID- D06-42489 CAD FILE LOC - PDM CATIA . A . INSTL-PDM,REMOTE B-PLR FPL862

DO NOT SCALE COPIES OF THIS DRAWING