RELEASE NUMBER	REV LTR	ZONE	REVISION DESCRIPTION	BY	DATE	APPD
P10331-10	-	-	INITIAL RELEASE	JEM	06/11/01	CLT
P10331-13	A	-	REDESIGNED ATTACHMENT	JEM	08/24/01	CLT
P18989-04	B	-	ADDED 5 CLIPS PER HEADLAMP	KYK	06/10/02	CLT

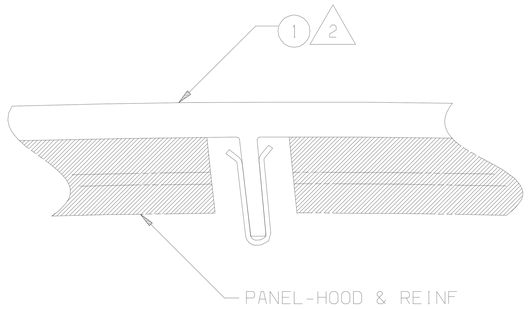

SECTION C-C

VIEW A
10 PLACES

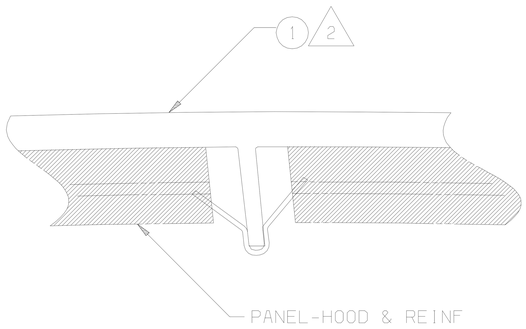

SECTION B-B

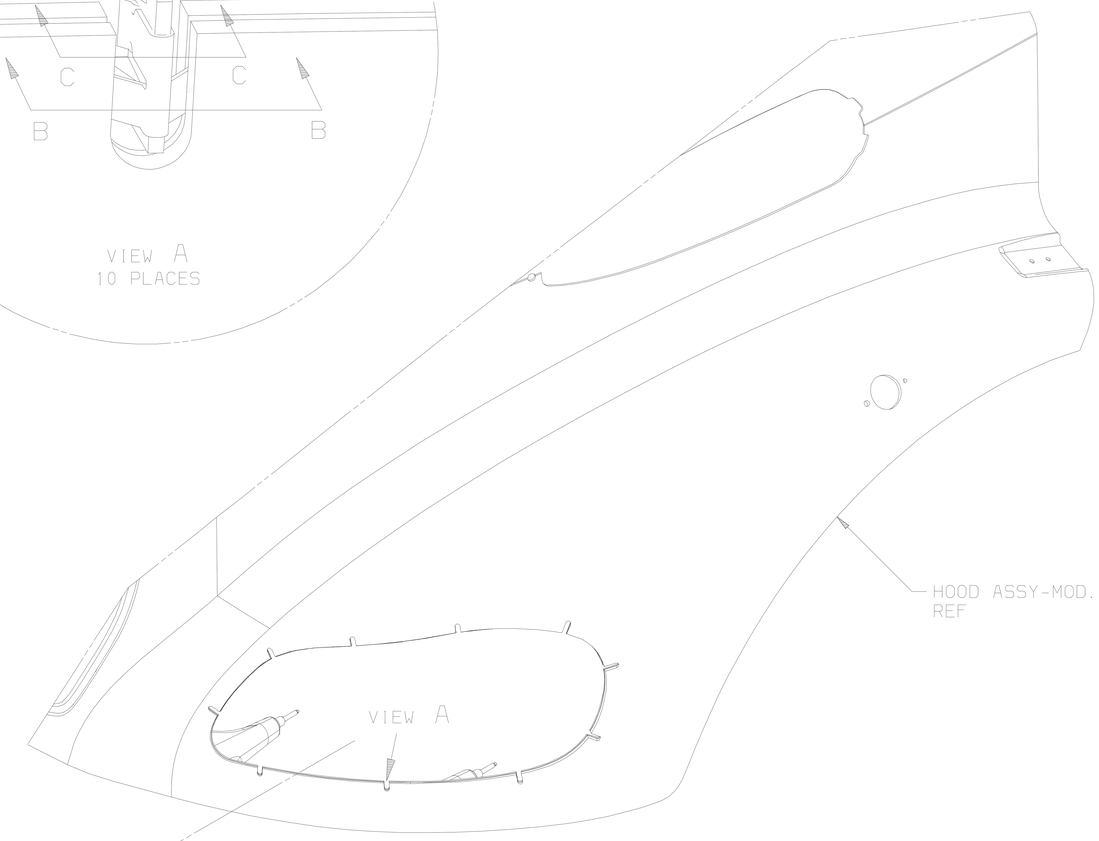

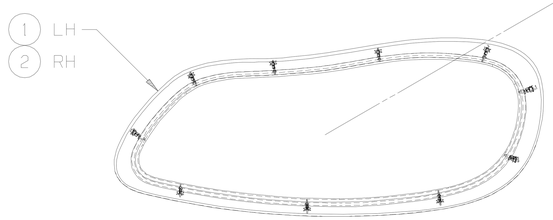

LH SHOWN
RH OPPOSITE

1. ALIGN CLIPS ON BACK OF ITEM 1,2 TO SLOTS IN HOOD.

2. SNAP ITEM 1,2 TO HOOD, NO VISIBLE GAPS SHOULD BE PRESENT BETWEEN ITEM 1,2 AND HOOD.

ITEM NUMBER D06-41573-000

DESCRIPTION INSTL-DIAG,BEZEL,,HEADLAMP,M2

FREIGHTLINER® LLC

THE INFORMATION CONTAINED HEREIN IS PROPRIETARY DATA, AND IS NOT FOR DISSEMINATION OR DISCLOSURE, IN WHOLE OR IN PART, FOR ANY PURPOSE OTHER THAN THAT FOR WHICH IT IS SUBMITTED, EXCEPT AS AUTHORIZED IN WRITING BY FREIGHTLINER LLC.

MATERIAL APPROVAL C.TRABANT	DATE 06/10/02	UNLESS OTHERWISE NOTED, DIMENSIONS AND TOLERANCES ARE DEFINED ACCORDING TO ASME STANDARD Y14.5M-1994, WITH EXCEPTIONS PER FREIGHTLINER EOSM 09E0-K17.	
DRAWN BY J.MEDOVARSKY	DATE 06/11/01		
CHECKED BY C.TRABANT	DATE 06/10/02	THIRD ANGLE PROJECTION	UNITS OF MEASURE MM
RESPONSIBLE ENGINEER C.TRABANT	DATE 06/11/01		
APPROVED BY C.TRABANT	DATE 06/11/01	MFG ENGR/PURCH AGENT DOUG BARLOW	DATE 06/10/02

DESCRIPTION INSTL-DIAG,BEZEL

SUPPLEMENTARY DESCRIPTION M2-312A1

ITEM/DRAWING NUMBER	REVISION LETTER	SHEET NUMBER
D06-41573	B	1 OF 1

DO NOT SCALE COPIES OF THIS DRAWING

LAST FILE- 02/05/20 07:06 PLOT DATE- JUNE 20, 2002 SHEET FILE- BSIZ SHEET PLOT TIME- 07:06 USER ID- CATIA DRAW ID- D06-41573 . B . . INSTL-DIAG.BEZEL FPL862