RELEASE NUMBER	REV LTR	ZONE	REVISION DESCRIPTION	BY	DATE	APPD
P10252-03	E	-	"A" STATUS RELEASE	JHL	06/20/01	CPJ
P10252-06	F	A4	"5+1/-0 FT" WAS "5FT"	JHL	11/06/01	CPJ
U89505-02	G	A2	ADDED -001	CDP	05/18/04	TDS

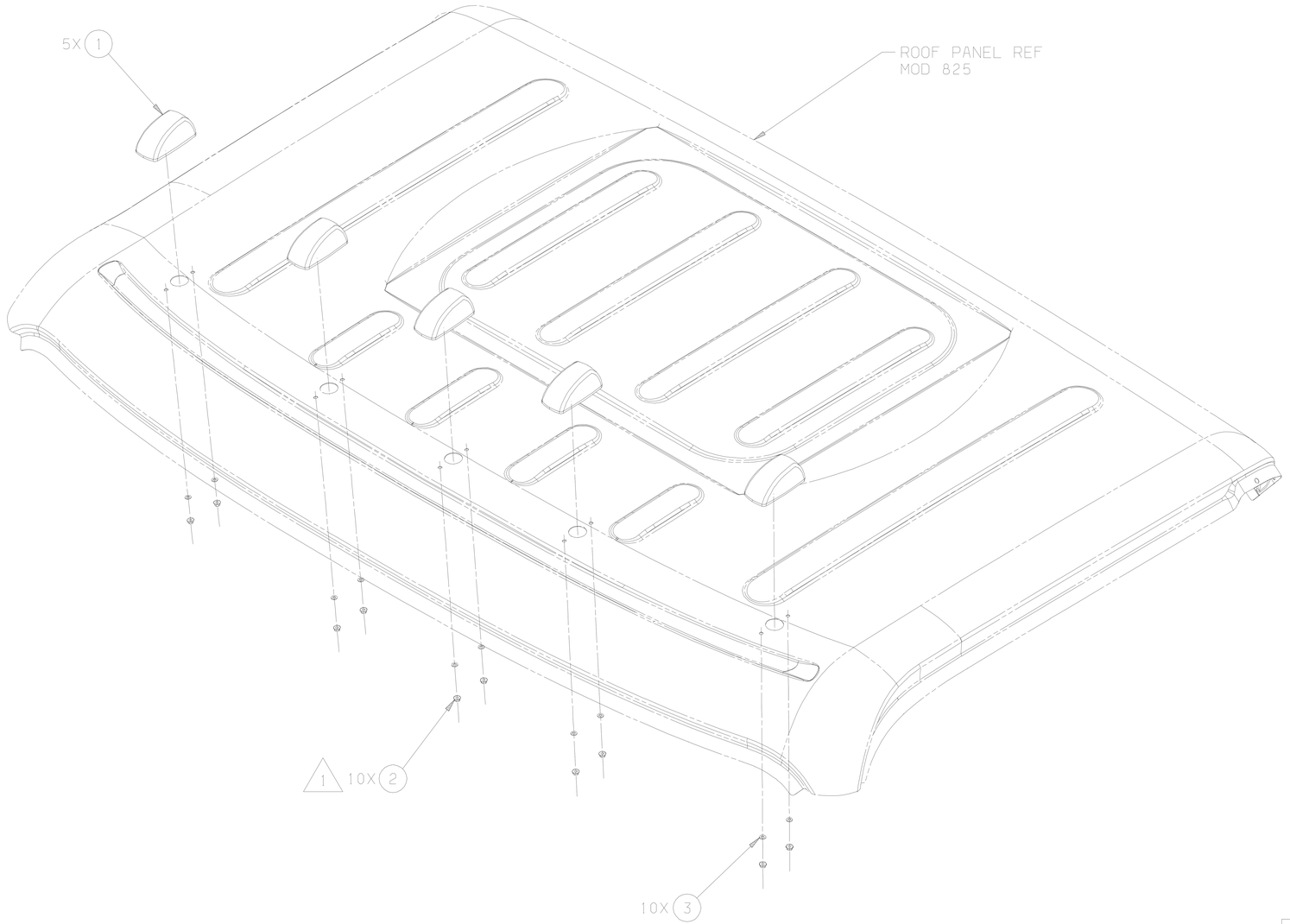

-000 SHOWN (A)

1. TORQUE NUT TO 5 +1/-0 FT-LBS. (F)

2. SEAL HOLES WITH SILICON SEALANT 48-00094-501.

(A)

ITEM NUMBER D06-34306-001
DESCRIPTION INSTL-MARKER LAMP-2 OUTBRD ONLY
ITEM NUMBER D06-34306-000
DESCRIPTION INSTL-MARKER LAMP

FREIGHTLINER® LLC

THE INFORMATION CONTAINED HEREIN IS PROPRIETARY DATA, AND IS NOT FOR DISSEMINATION OR DISCLOSURE, IN WHOLE OR IN PART, FOR ANY PURPOSE OTHER THAN THAT FOR WHICH IT IS SUBMITTED, EXCEPT AS AUTHORIZED IN WRITING BY FREIGHTLINER LLC.

MATERIAL APPROVAL	DATE	UNLESS OTHERWISE NOTED, DIMENSIONS AND TOLERANCES ARE DEFINED ACCORDING TO ASME STANDARD Y14.5M-1994, WITH EXCEPTIONS PER FREIGHTLINER EDSM 09E0-K17.	
DRAWN BY J.LEE	DATE 06/20/01		
CHECKED BY C.JONG	DATE 06/20/01	THIRD ANGLE PROJECTION	UNITS OF MEASURE MM
RESPONSIBLE ENGINEER E.KREYCIK	DATE 06/20/01		
APPROVED BY D.WELLS	DATE 06/20/01	MFG ENGR/PURCH AGENT D. BARLOW	DATE 06/20/01

DESCRIPTION INSTL-MARKER LAMP

SUPPLEMENTARY DESCRIPTION 302,M2

ITEM/DRAWING NUMBER	REVISION LETTER	SHEET NUMBER
D06-34306	G	1 OF 2

LAST FILE- 04/05/19 07:01 PLOT DATE- MAY 19, 2004 SHEET FILE- PLOT TIME- 07:02 BSIZ SHEET USER ID- CATIA DRAW ID- D06-34306 DWG FILE LOC - PDX CATIA G . . INSTL-MARKER LAMP FPL862

RELEASE NUMBER	REV LTR	ZONE	REVISION DESCRIPTION	BY	DATE	APPD
U89505-02	G	-	ADDED THIS SHEET.-001	CDP	06/20/01	TDS

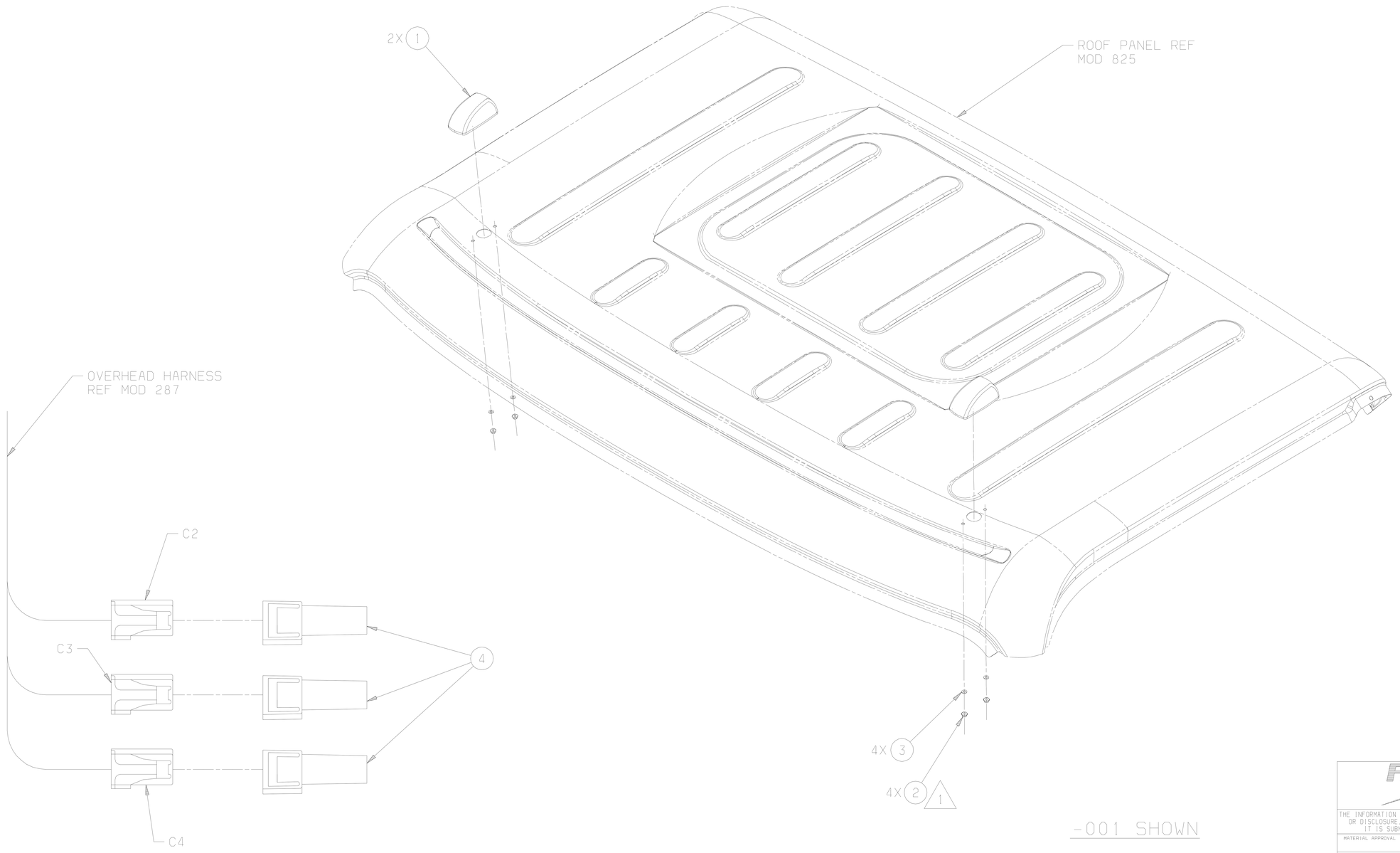

-001 SHOWN

FREIGHTLINER® LLC

THE INFORMATION CONTAINED HEREIN IS PROPRIETARY DATA, AND IS NOT FOR DISSEMINATION OR DISCLOSURE, IN WHOLE OR IN PART, FOR ANY PURPOSE OTHER THAN THAT FOR WHICH IT IS SUBMITTED, EXCEPT AS AUTHORIZED IN WRITING BY FREIGHTLINER LLC.

MATERIAL APPROVAL	DATE	UNLESS OTHERWISE NOTED, DIMENSIONS AND TOLERANCES ARE DEFINED ACCORDING TO ASME STANDARD Y14.5M-1994, WITH EXCEPTIONS PER FREIGHTLINER EOSM 09E0-K17.
DRAWN BY C.PHIMISTER	DATE 05/18/04	
CHECKED BY C.PHIMISTER	DATE 05/18/04	THIRD ANGLE PROJECTION — UNITS OF MEASURE MM
RESPONSIBLE ENGINEER C.PHIMISTER	DATE 05/18/04	
APPROVED BY T.SEGNA	DATE 05/18/04	MFG ENGR/PURCH AGENT N/A — DATE

DESCRIPTION: INSTL-MARKER LAMP

SUPPLEMENTARY DESCRIPTION: 302,M2

ITEM/DRAWING NUMBER	REVISION LETTER	SHEET NUMBER
D06-34306	G	2 OF 2

DO NOT SCALE COPIES OF THIS DRAWING

LAST FILE= 04:05/19 07:01 PLOT DATE= MAY 19, 2004 SHEET FILE= PLOT TIME= 07:02 BSIZ SHEET USER ID= CATIA DRAW ID= D06-34306 DWG FILE LOC = PDX CATIA . 2 G . INSTL-MARKER LAMP FPL862