RELEASE NUMBER	REV LTR	ZONE	REVISION DESCRIPTION	BY	DATE	APPD
P06868-43	-	-	INITIAL RELEASE	SBT	09/15/99	TAL
P21573-06	A	5B	Added Item 9	DAC	04/29/03	CPJ
P30572-Y0	B	5A	TORQUE SPEC ADDED	BS	10/18/06	CPJ

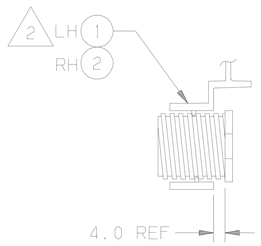

SECTION A-A
SCALE 1:1

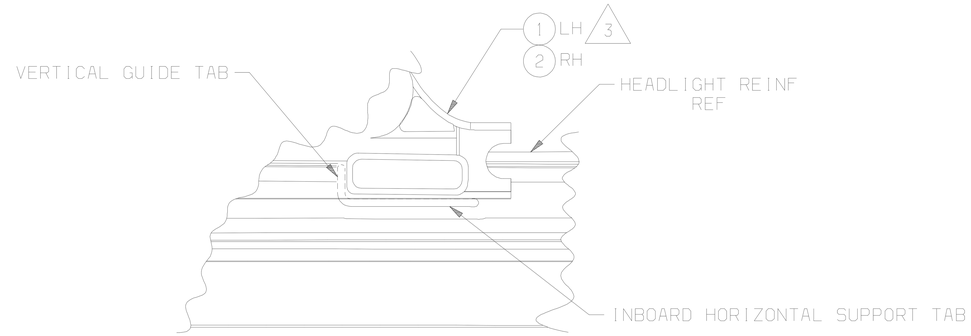

VIEW B
SCALE 1:1

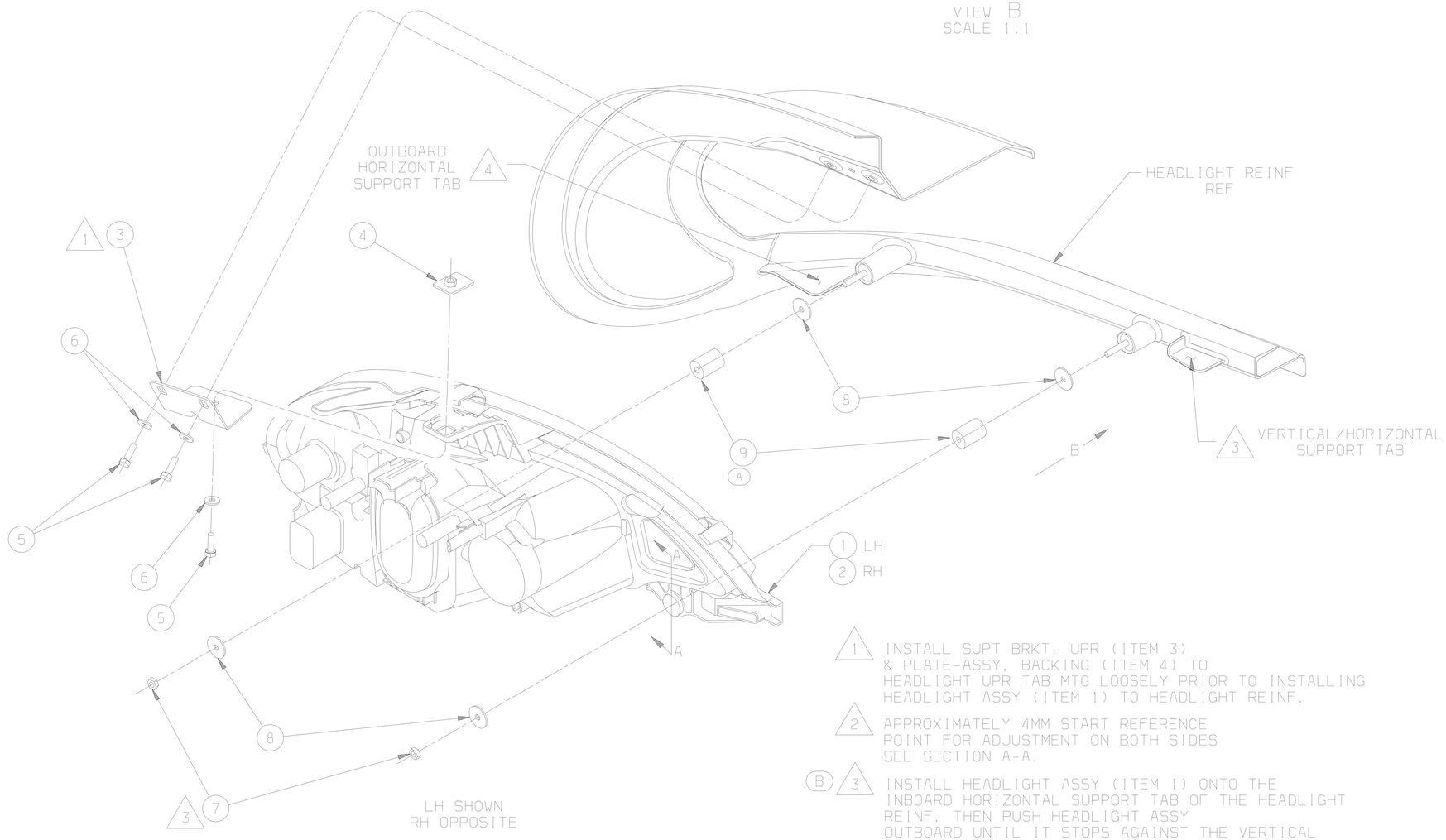

LH SHOWN
RH OPPOSITE

1. INSTALL SUPT BRKT, UPR (ITEM 3) & PLATE-ASSY, BACKING (ITEM 4) TO HEADLIGHT UPR TAB MTG LOOSELY PRIOR TO INSTALLING HEADLIGHT ASSY (ITEM 1) TO HEADLIGHT REINF.

2. APPROXIMATELY 4MM START REFERENCE POINT FOR ADJUSTMENT ON BOTH SIDES SEE SECTION A-A.

B 3. INSTALL HEADLIGHT ASSY (ITEM 1) ONTO THE INBOARD HORIZONTAL SUPPORT TAB OF THE HEADLIGHT REINF. THEN PUSH HEADLIGHT ASSY OUTBOARD UNTIL IT STOPS AGAINST THE VERTICAL GUIDE TAB, PRIOR TO FINAL INSTALLATION OF NUT (ITEM 7). SEE VIEW B. NUT FASTENING TORQUE: 4.0 - 5.0 ft/lb.

4. HEADLIGHT ASSY (ITEM 1) TO REST ON OUTBOARD HORIZONTAL SUPPORT TAB ON HEADLIGHT REINF.

B 5. TORQUE FASTENERS PER SPEC 49-00104.

ITEM NUMBER D06-33349-000
DESCRIPTION INSTL-DIAG, HEADLAMP

FREIGHTLINER® LLC

THE INFORMATION CONTAINED HEREIN IS PROPRIETARY DATA, AND IS NOT FOR DISSEMINATION OR DISCLOSURE, IN WHOLE OR IN PART, FOR ANY PURPOSE OTHER THAN THAT FOR WHICH IT IS SUBMITTED, EXCEPT AS AUTHORIZED IN WRITING BY FREIGHTLINER LLC.

MATERIAL APPROVAL T.LESLIE	DATE 09/15/99	UNLESS OTHERWISE NOTED, DIMENSIONS AND TOLERANCES ARE DEFINED ACCORDING TO ASME STANDARD Y14.5M-1994, WITH EXCEPTIONS PER FREIGHTLINER EOSM 09E0-K17.
DRAWN BY OLSATECH	DATE 09/15/99	
CHECKED BY T.LESLIE	DATE 09/30/99	THIRD ANGLE PROJECTION — UNITS OF MEASURE MM
RESPONSIBLE ENGINEER T.LESLIE	DATE 09/15/99	
APPROVED BY T.LESLIE	DATE 09/15/99	MFG ENGR/PURCH AGENT G.Knips — DATE 04/29/03

DESCRIPTION
INSTL-DIAG, HEADLAMP
SUPPLEMENTARY DESCRIPTION
COLUMBIA

ITEM/DRAWING NUMBER	REVISION LETTER	SHEET NUMBER
D06-33349	B	1 OF 1

LAST FILE= 06/10/26 10:51 PLOT DATE= OCTOBER 26, 2006 PLOT TIME= 10:52 SHEET FILE= SMA SHEET USER ID= CATIA DWG FILE= SMARAGD DRAW ID= TEXX

DO NOT SCALE COPIES OF THIS DRAWING

D-SIZE