RELEASE NUMBER	REV LTR	ZONE	REVISION DESCRIPTION	BY	DATE	APPD
P2A281-13	-	-	INITIAL RELEASE	GPH	11/23/95	MGP
P2A281-59	A	A5	REVISED NOTE 1	RMS	02/05/96	MGP
P08715-13	B	-	ADDED -001 AND NOTE 2	JRL	07/13/01	RDF
P16133-01	C	-	ADDED -002;NOTE 3 AND DETAIL	JRL	08/21/01	RDF
			FOR SCREW BOSS			

TEST SPECIFICATIONS
(AT 6 CYCLES/MIN.)

MUST WITHSTAND 50,000 CYCLES AT FOLLOWING
14 VOLTS D.C.LOADS:
IGNITION - 8 AMPS; ACCESSORY- 30 AMPS (INDUCTIVE)
SOLENOID - HEAVY DELCO SOLENOID- MAKE 75 AMPS
BREAK 20 AMPS - CONTINUOUS CURRENT CARRYING
CAPACITY ("ACC" TERMINAL) 30 AMPS, WITH
#10 OR #12 GAGE WIRE, AS REQUIRED.

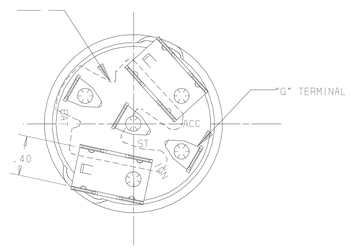

VIEW WITH NUT REMOVED

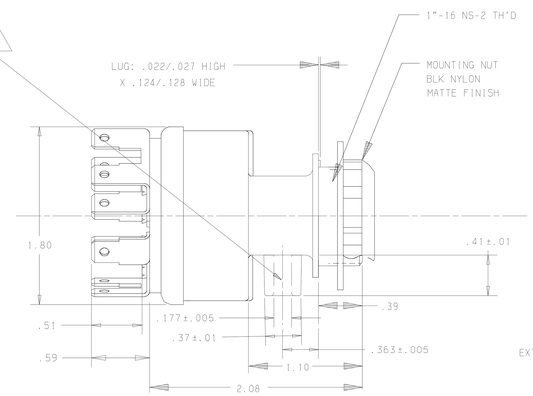

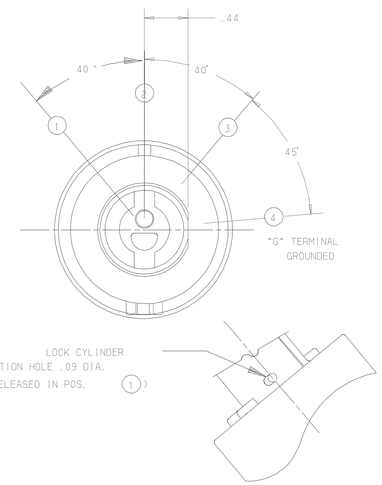

NOTES:

1. SWITCH SHOWN & SHIPPED IN #3 POSITION.
2. LOCK REMOVABLE IN #1 POSITION
3. SPRING TORQUE TO COMPLETE START CONTACT TO BE 60 TO 120 INCH OZ'S.
4. TO RECEIVE HANSEN MANUFACTURING DOUBLE BITTED LOCK CYLINDER MANUFACTURED USING IDEAL TECHNOLOGY.

SWITCH POSITIONS

1. "ACC" ON
2. OFF
3. "IGN" &"ACC" ON
4. "IGN" & "START" ON (MOMENTARY) SPRING RETURN TO #3 POSITION (IGN & ACC). "G" TERMINAL GROUNDED PRIOR TO START CIRCUIT CLOSING.

DELIVERY MUST CONFORM EXACTLY WITH DRAWING SPECIFICATIONS AND APPROVED Q.A. SAMPLES. ABSOLUTELY NO CHANGES ARE PERMITTED WITHOUT PRIOR APPROVAL BY FREIGHTLINER CORP. THIS INCLUDES CHANGES TO: SOFTWARE, MATERIALS, INTERNAL COMPONENTS, MANUFACTURING PROCESSES.

(A) 1. MTG NUT SHIPPED AS PART OF ASSEMBLY. REF 06-24319-000

(B) 2. A06-22717-001 AND -002 USE 6 TUMBLER CORE; -000 TO BE USED WITH A 5 TUMBLER CORE

(C) 3 SCREW BOSS ON -002 ONLY

4. VENDOR: JOSEPH POLLAK CORP.

ITEM NUMBER	DESCRIPTION
A06-22717-002	ASSY-IGN SWITCH,6 TUMBLER
A06-22717-001	ASSY-IGN SWITCH,6 TUMBLER
A06-22717-000	ASSY-IGNITION SWITCH

FREIGHTLINER LLC

THE INFORMATION CONTAINED HEREIN IS PROPRIETARY DATA, AND IS NOT FOR DISSEMINATION OR DISCLOSURE, IN WHOLE OR IN PART, FOR ANY PURPOSE OTHER THAN THAT FOR WHICH IT IS SUBMITTED, EXCEPT AS AUTHORIZED IN WRITING BY FREIGHTLINER LLC.

MATERIAL APPROVAL	DATE	UNLESS OTHERWISE NOTED, DIMENSIONS AND TOLERANCES ARE DEFINED ACCORDING TO ANSI STANDARD Y14.5M-1982, WITH EXCEPTIONS PER FREIGHTLINER EOM SECT 307.
DRAWN BY G.HARVEY	DATE 11/23/95	
CHECKED BY W.MASSEY	DATE 08/22/01	THIRD ANGLE PROJECTION; UNITS OF MEASURE MM
RESPONSIBLE ENGINEER R.LUPTON	DATE 07/13/01	
APPROVED BY R.FANKHAUSER	DATE 07/13/01	MFG ENGR/PURCH AGENT K. KERBS; DATE 08/22/01

DESCRIPTION
ASSY-IGNITION SWITCH
SUPPLEMENTARY DESCRIPTION

ITEM/DRAWING NUMBER	REVISION LETTER	SHEET NUMBER
A06-22717	C	1 OF 1

DO NOT SCALE COPIES OF THIS DRAWING

LAST FILE- 01/10/08 16:00 PLOT DATE- OCTOBER 8, 2001 PLOT TIME- 16:00 SHEET FILE- BSIZ SHEET USER ID- CATIA DRAW ID- A06-22717 . C . .ASSY-IGNITION SWITCH FPL862