RELEASE NUMBER	REV LTR	ZONE	REVISION DESCRIPTION	BY	DATE	APPD
P46912-01	C	--	REDRAWN IN CATIA V5 FORMAT	WVB	09/05/13	JJM

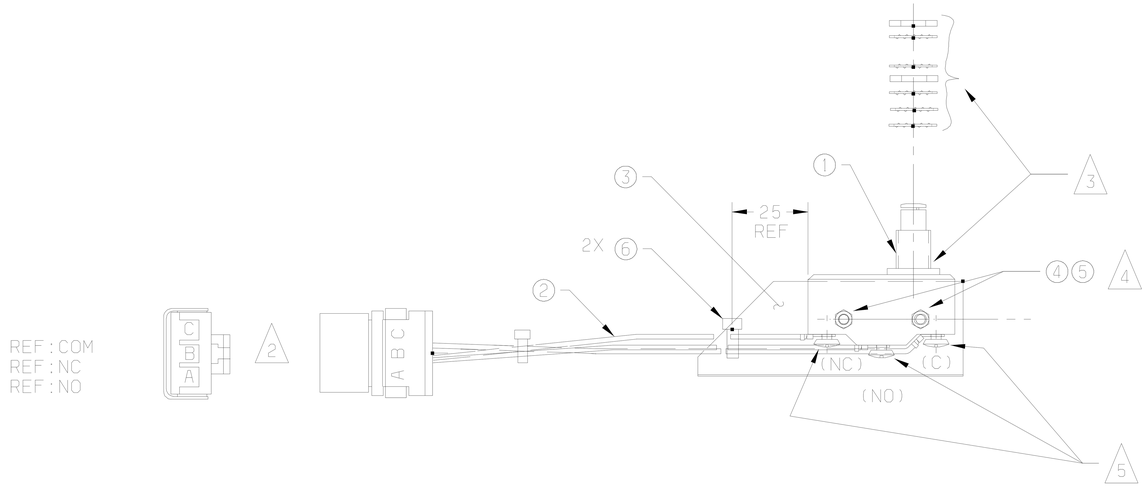

-002 & -003 ASSY

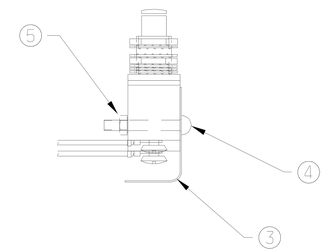

-002/-003 END VIEW

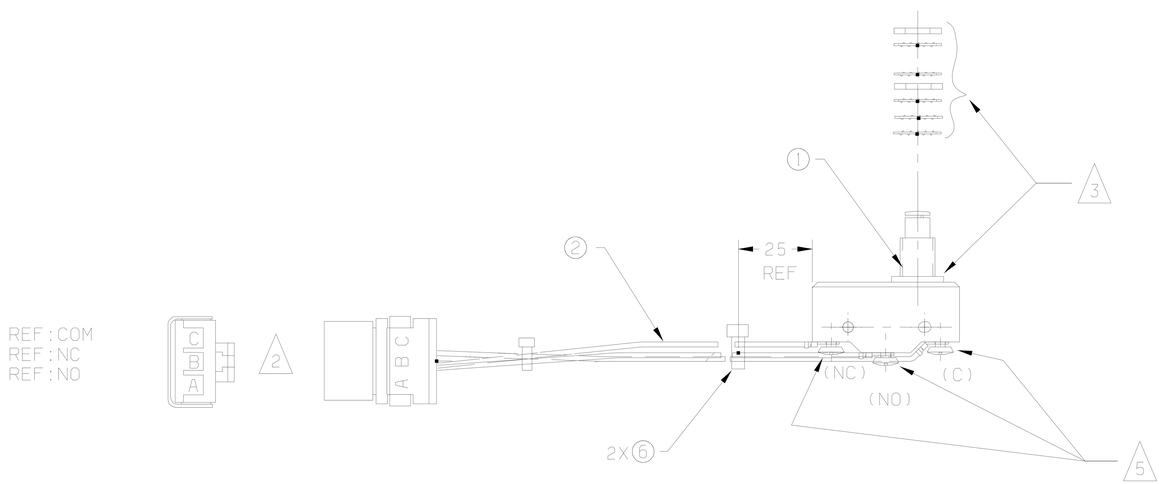

-000 & -001 ASSY

1. ALTERNATE VENDOR: OMRON
   -001: Z-15GQ-B7-K
   -001: Z-15GQ#-B7-K
2. CONNECTOR END VIEWS ARE SHOWN FROM THE CABLE INSERTION END.
3. PARTS TO BE SUPPLIED BY VENDOR (INCLUDED WITH SWITCH):
   QUANTITY (2) HEX NUT 15/32-32 (REF NICIO 10377)
   QUANTITY (5) LOCK WASHER 1/2 INTERNAL TOOTH (REF MICTS10013)
4. 3 LB/INCH TORQUE REQUIRED TO ASSEMBLE ITEMS 3, 4 AND 5 TO ITEM 1.
5. 5 LB/INCH TORQUE REQUIRED TO ASSEMBLE RING TERMINALS TO ITEM 1.

DELIVERY MUST CONFORM EXACTLY WITH DRAWING SPECIFICATIONS AND, WHERE REQUIRED BY Q.A., WITH APPROVED Q.A. SAMPLES. ABSOLUTELY NO CHANGES ARE PERMITTED WITHOUT PRIOR APPROVAL BY DAIMLER TRUCKS NORTH AMERICA LLC. THIS INCLUDES CHANGES TO: SOFTWARE, MATERIALS, INTERNAL COMPONENTS, MANUFACTURING PROCESSES.

QUANTITY	QUANTITY	QUANTITY	QUANTITY	ITEM NUMBER	DESCRIPTION	REF
2	2	2	2	23-09796-309	TIE STRAP	6
2	2	--	--	23-09336-003	NUT, 6-32 LOCK	5
2	2	--	--	23-13243-710	SCREW, 6-32	4
1	1	--	--	06-18542-000	COVER	3
1	1	1	1	A06-21583-000	HARNESS-CLUTCH SWITCH	2
1	--	1	--	MICBZ2RQ722233A2	SWITCH, GOLD	1
--	1	--	1	MICBZ2RQ233A2	SWITCH, SILVER	1

ITEM NUMBER	DESCRIPTION
A06-21582-003	SWITCH-CLUTCH PEDAL
A06-21582-002	SWITCH-CLUTCH PEDAL
A06-21582-001	SWITCH-CLUTCH PEDAL
A06-21582-000	SWITCH-CLUTCH PEDAL

DAIMLER

Daimler Trucks North America

THE INFORMATION CONTAINED HEREIN IS CONFIDENTIAL AND PROPRIETARY TO DAIMLER TRUCKS NORTH AMERICA LLC (DTNA) AND SHALL NOT BE COPIED, REPRODUCED, DISCLOSED, PUBLISHED, OR USED FOR ANY PURPOSE WITHOUT THE EXPRESS WRITTEN PERMISSION OF DTNA

		DATE
MATERIAL APPROVAL	J. MAO	09/05/13
DRAWN BY	W. BOURQUE	09/05/13
CHECKED BY	W. ADAMIEC	09/05/13
RESPONSIBLE ENGINEER	W. ADAMIEC	09/05/13
APPROVED BY	J. MAO	09/05/13

UNLESS OTHERWISE NOTED, DIMENSIONS AND TOLERANCES ARE DEFINED ACCORDING TO ASME STANDARD Y14.5M-1994, WITH EXCEPTIONS PER THE CAD HANDBOOK CS072.

THIRD ANGLE PROJECTION

UNITS OF MEASURE: MM

DESCRIPTION: SWITCH-CLUTCH PEDAL

SUPPLEMENTARY DESCRIPTION: 12802 USED WITH JAKE BRAKE

ITEM/DRAWING NUMBER	REV LETTER	SHEET NUMBER
A06-21582	C	1 OF 1

CATIA V5 1 D-SIZE